PB89-198303

Quality Assurance Procedures: Method 5G Determination of Particulate Emissions from Wood Heaters from a Dilution Tunnel Sampling Location

Radian Corp., Research Triangle Park, NC

Prepared for:

Environmental Protection Agency, Research Triangle Park, NC

Jun 89

U.S. Department of Commerce
National Technical Information Service
NTIS

TECHNICAL REPORT DATA
(Please read Instructions on the reverse before completing)

1. REPORT NO. EPA/600/3-89/050	2.	3. RECIPIENT'S ACCESSION NO. PB89-198303/AS
4. TITLE AND SUBTITLE Quality Assurance Procedures: Method 5G Determination of Particulate Emissions from Wood Heaters from a Dilution Tunnel Sampling Location		5. REPORT DATE June 1989
		6. PERFORMING ORGANIZATION CODE
7. AUTHOR(S) M.W. Hartman, R.C. Olin, G.D. Rives, T.E. Ward		8. PERFORMING ORGANIZATION REPORT NO.
9. PERFORMING ORGANIZATION NAME AND ADDRESS Radian Corporation Research Triangle Park, NC 27709		10. PROGRAM ELEMENT NO.
		11. CONTRACT/GRANT NO. 68-02-4119
12. SPONSORING AGENCY NAME AND ADDRESS Atmospheric Research and Exposure Assessment Laboratory Office of Research and Development U.S. Environmental Protection Agency Research Triangle Park, NC 27711		13. TYPE OF REPORT AND PERIOD COVERED
		14. SPONSORING AGENCY CODE EPA/600/09

15. SUPPLEMENTARY NOTES

16. ABSTRACT

Quality assurance procedures are contained in this comprehensive document intended to be used as an aid for wood heater manufacturers and testing laboratories in performing particulate matter sampling of wood heaters according to EPA protocol, Method 5G. These procedures may be used in research and development, and as an aid in auditing and certification testing. A detailed, step-by-step quality assurance guide is provided to aid in the procurement and assembly of testing apparatus, to clearly describe the procedures, and to facilitate data collection and reporting. Suggested data sheets are supplied that can be used as an aid for both recordkeeping and certification applications. Throughout the document, activity matrices are provided to serve as a summary reference. Checklists are also supplied that can be used by testing personnel. Finally, for the purposes of ensuring data quality, procedures are outlined for apparatus operation, maintenance, and traceability. These procedures combined with the detailed description of the sampling and analysis protocol will help ensure the accuracy and reliability of Method 5G emission testing results.

17. KEY WORDS AND DOCUMENT ANALYSIS

a. DESCRIPTORS	b. IDENTIFIERS/OPEN ENDED TERMS	c. COSATI Field/Group

18. DISTRIBUTION STATEMENT Release to Public	19. SECURITY CLASS (This Report) Unclassified	21. NO. OF PAGES 248
	20. SECURITY CLASS (This page) Unclassified	22. PRICE

EPA Form 2220-1 (Rev. 4-77) PREVIOUS EDITION IS OBSOLETE

PB89-198303

EPA/600/3-89/050
June 1989

QUALITY ASSURANCE PROCEDURES: METHOD 5G DETERMINATION OF PARTICULATE EMISSIONS FROM WOOD HEATERS FROM A DILUTION TUNNEL SAMPLING LOCATION

by:

M. W. Hartman, R. C. Olin, and G. D. Rives
Radian Corporation
Research Triangle Park, North Carolina 27709

T. E. Ward
Quality Assurance Division
U. S. Environmental Protection Agency
Research Triangle Park, North Carolina 27711

68-02-4119

Project Officer:

Thomas E. Ward
Quality Assurance Division
Atmospheric Research and Exposure Assessment Laboratory
Research Triangle Park, North Carolina 27711

Atmospheric Research and Exposure Assessment Laboratory
Office of Research and Development
U. S. Environmental Protection Agency
Research Triangle Park, North Carolina 27711

REPRODUCED BY
U.S. DEPARTMENT OF COMMERCE
NATIONAL TECHNICAL INFORMATION SERVICE
SPRINGFIELD, VA. 22161

DISCLAIMER

The information in this document has been funded wholly or in part by the U. S. Environmental Protection Agency under contract number EPA 68-02-4119 to Radian Corporation. It has been subjected to the Agency's peer and administrative review, and it has been approved for publication as an EPA document. Mention of trade names or commercial products does not constitute endorsement or recommendation for use.

FOREWORD

Measurement and monitoring research efforts are designed to anticipate environmental problems, to support regulatory actions by developing an in-depth understanding of the nature and processes that impact health and the ecology, to provide innovative means of monitoring compliance with regulations, and to evaluate the effectiveness of health and environmental protection efforts through the monitoring of long-term trends. The Atmospheric Research and Exposure Assessment Laboratory, Research Triangle Park, North Carolina, has responsibility for: assessment of environmental monitoring technology and systems for air, implementation of Agency-wide quality assurance programs for air pollution measurement systems, and supplying technical support to other groups in the Agency including the Office of Air and Radiation, the Office of Toxic Substances, and the Office of Solid Waste.

Emissions from wood heaters are regulated by the Agency, which has published methodology for measurement of these emissions. Proper applications of quality assurance procedures are necessary for production of acceptable data and for determination of the quality of the data produced. This research was undertaken to produce quality assurance procedures for the Agency's Method 5G.

Gary J. Foley
Director
Atmospheric Research and Exposure Assessment Laboratory
Research Triangle Park, North Carolina 27711

ABSTRACT

Quality Assurance Procedures: Method 5G, Determination of Particulate Emissions from Wood Heaters from a Dilution Tunnel Sampling Location is a comprehensive document intended to be used as an aid for wood heater manufacturers and testing laboratories in performing particulate matter sampling of wood heaters according to EPA protocol, Method 5G. These procedures may be used in research and development, and as an aid in auditing, and certification testing. A detailed, step-by-step quality assurance guide is provided to aid in the procurement and assembly of testing apparatus, to clearly describe the procedures, and to facilitate data collection and reporting. Suggested data sheets are supplied that can be used as an aid for both recordkeeping and certification applications. Throughout the document, activity matrices are provided to serve as a summary reference. Checklists are also supplied that can be used by testing personnel. Finally, for the purposes of ensuring data quality, procedures are outlined for apparatus operation, maintenance, and traceability. These procedures combined with the detailed description of the sampling and analysis protocol will help ensure the accuracy and reliability of Method 5G emission testing results.

CONTENTS

Foreword iii
Abstract iv
Tables xii
Figures xiii
Introduction xvii
Conclusions xvii
Recommendations xvii

Summary of Method 5G xviii
Quality Assurance Procedures Highlights xx

1.0 Procurement of Apparatus and Supplies 1-1

1.1 Apparatus and Supplies for Installation of Dilution Tunnel 1-3

1.1.1 Hood 1-3
1.1.2 90° Elbows 1-5
1.1.3 Mixing Section 1-5
1.1.4 Mixing Baffles 1-5
1.1.5 Sampling Section 1-6
1.1.6 Damper (Optional) 1-6
1.1.7 Blower 1-6
1.1.8 Variac (Optional) 1-7
1.1.9 Wire Chimney Brush 1-7
1.1.10 Miscellaneous Equipment for Installation of Dilution Tunnel 1-7

1.2 Apparatus and Supplies for Dilution Tunnel Flow Measurement 1-8

1.2.1 Pitot Tube 1-8
1.2.2 Differential Pressure Gauge (Manometer) 1-11
1.2.3 Temperature Gauge 1-12
1.2.4 Barometer 1-12
1.2.5 Miscellaneous Equipment for Measuring Dilution Tunnel Flow 1-12

1.3 Apparatus and Supplies for Sample Train Metering System 1-13

1.3.1 Dry Gas Meter 1-13
1.3.2 Vacuum Pump 1-13
1.3.3 Temperature Gauge 1-15
1.3.4 Vacuum Gauge 1-15
1.3.5 Differential Pressure Gauge (Optional) 1-15

CONTENTS (Continued)

1.3.6 Orifice (Optional) 1-15
1.3.7 Rotameter (Optional) 1-15
1.3.8 Miscellaneous Equipment for Sample Train Metering System 1-16

1.4 Apparatus and Supplies for Sample Collection - Method 5G-1 1-16

1.4.1 Probe 1-16
1.4.2 Probe Cooling System (Optional) 1-16
1.4.3 Filter Holders 1-18
1.4.4 Filter Temperature Monitor 1-18
1.4.5 Dryer 1-18
1.4.6 Miscellaneous Equipment for Sample Collection - Method 5G-1 1-19

1.5 Apparatus and Supplies for Sample Collection - Method 5G-2 1-19

1.5.1 Probe 1-21
1.5.2 Filter Holders 1-21
1.5.3 Filter Heating System (Optional) 1-21
1.5.4 Impinger Train (Condenser) 1-21
1.5.5 Miscellaneous Equipment for Sample Collection - Method 5G-2 1-22

1.6 Apparatus and Supplies for Sample Collection - Method 5G-3 1-23

1.6.1 Probe 1-23
1.6.2 Probe Cooling System (Optional) 1-23
1.6.3 Filter Holders 1-23
1.6.4 Filter Temperature Monitor 1-24
1.6.5 Dryer 1-24
1.6.6 Miscellaneous Equipment for Sample Collection - Method 5G-3 1-24

1.7 Apparatus and Supplies for Sample Recovery and Analysis - Method 5G-1 1-24

1.7.1 Probe Brush 1-24
1.7.2 Wash Bottles 1-24
1.7.3 Sample Storage Containers 1-24
1.7.4 Petri Dishes 1-25
1.7.5 Funnel 1-25
1.7.6 Glass Weighing Dishes 1-25

CONTENTS (Continued)

1.7.7 Beakers 1-25
1.7.8 Hygrometer 1-25
1.7.9 Temperature Gauge 1-25
1.7.10 Desiccator 1-26
1.7.11 Filters 1-26
1.7.12 Acetone 1-26
1.7.13 Analytical Balance 1-26
1.7.14 Drying Oven (Optional) 1-26
1.7.15 Miscellaneous Equipment for Sample Recovery and Analysis - Method 5G-1 1-27

1.8 Apparatus and Supplies for Sample Recovery and Analysis - Method 5G-2 1-27

1.8.1 Probe Brush 1-27
1.8.2 Wash Bottles 1-27
1.8.3 Sample Storage Containers 1-27
1.8.4 Petri Dishes 1-27
1.8.5 Graduated Cylinder and/or Triple Beam Balance (Optional) 1-27
1.8.6 Plastic Storage Containers 1-28
1.8.7 Funnel and Policeman 1-28
1.8.8 Weighing Dishes 1-28
1.8.9 Desiccator 1-28
1.8.10 Beakers 1-28
1.8.11 Hygrometer 1-28
1.8.12 Temperature Gauge 1-28
1.8.13 Separatory Funnel 1-28
1.8.14 Filters 1-28
1.8.15 Silica Gel 1-28
1.8.16 Distilled Water 1-29
1.8.17 Stopcock Grease 1-29
1.8.18 Acetone 1-29
1.8.19 Dichloromethane 1-29
1.8.20 Analytical Balance 1-29
1.8.21 Miscellaneous 1-29

1.9 Apparatus and Supplies for Sample Recovery and Analysis - Method 5G-3 1-29

1.9.1 Probe Brush 1-30
1.9.2 Petri Dishes 1-30
1.9.3 Weighing Dishes 1-30
1.9.4 Hygrometer 1-30
1.9.5 Temperature Gauge 1-30
1.9.6 Filters 1-30

CONTENTS (Continued)

1.9.7 Acetone 1-30
1.9.8 Desiccator 1-30
1.9.9 Analytical Balance 1-30
1.9.10 Miscellaneous 1-30

1.10 Apparatus and Supplies for Calibration Procedures ... 1-31

1.10.1 Wet Test Meter 1-31
1.10.2 Reference Dry Gas Meter 1-31
1.10.3 Pitot Tube Calibration Assembly 1-31
1.10.4 Mercury-in-Glass or ASTM Thermometer 1-31
1.10.5 Mercury-in-Glass Barometer 1-32
1.10.6 Reference Differential Pressure Gauge 1-32
1.10.7 Analytical Balance Calibration Weights 1-32

2.0 Calibration of Apparatus 2-1

2.1 Pitot Tube 2-1

2.1.1 Type S Pitot Tube 2-1
2.1.2 Standard Pitot Tube 2-12
2.1.3 Calibration Procedure 2-15
2.1.4 Recalibration 2-19

2.2 Temperature Sensors 2-19

2.3 Barometer 2-22

2.4 Differential Pressure Gauge 2-22

2.5 Metering System 2-25

2.5.1 Wet Test Meter 2-25
2.5.2 Sample Metering System 2-30

2.6 Rotameter (Optional) 2-35

2.7 Analytical Balance 2-37

3.0 Pretest Procedures 3-1

3.1 Precertification Test Series Procedures 3-1

3.1.1 Dilution Tunnel Cleaning and Assembly 3-1
3.1.2 Precertification Series Test Calibration Checks and Review of Calibration Records 3-4

CONTENTS (Continued)

3.2 Pretest Run Procedures - Dilution Tunnel 3-6

3.2.1 Preliminary Equipment Check 3-6
3.2.2 Preliminary Dilution Tunnel Measurements 3-7
3.2.3 Induced Draft Check 3-7
3.2.4 Smoke Capture Check 3-10
3.2.5 Velocity Traverse 3-10
3.2.6 Measurement of the Static Pressure in the Dilution Tunnel 3-13

3.3 Method 5G-1 Pretest Run Procedures 3-13

3.3.1 Sampling Equipment Preparation, Cleaning, and Checks (Method 5G-1) 3-13
3.3.2 Sampling and Analysis Reagent Checks and Pretest Weight Determinations (Method 5G-1) .. 3-15
3.3.3 Equipment Identification (Method 5G-1) 3-18
3.3.4 Sampling Train Preparation and Assembly (Method 5G-1) 3-18
3.3.5 Pretest Run Sampling Train Leak Check 3-20

3.4 Method 5G-2 Pretest Run Activities 3-21

3.4.1 Sampling Equipment Preparation, Cleaning, and Checks (Method 5G-2) 3-21
3.4.2 Sampling and Analysis Reagent Checks and Pretest Weight Determinations (Method 5G-2) .. 3-23
3.4.3 Equipment Identification (Method 5G-2) 3-27
3.4.4 Sample Train Preparation and Assembly (Method 5G-2) 3-27
3.4.5 Pretest Run Sampling Train Leak Check 3-28

3.5 Method 5G-3 Pretest Run Activities 3-29

3.5.1 Sampling Equipment Preparation, Cleaning, and Checks (Method 5G-3) 3-29
3.5.2 Sampling and Analysis Reagent Checks and Pretest Weight Determinations (Method 5G-3) .. 3-31
3.5.3 Equipment Identification (Method 5G-3) 3-34
3.5.4 Sampling Train Preparation and Assembly (Method 5G-3) 3-34
3.5.5 Sampling Train Leak Checks 3-36

4.0 Test Run Operations 4-1

4.1 Dilution Tunnel Operation and Flow Monitoring 4-1
4.2 Sampling Train Operation 4-1

CONTENTS (Continued)

5.0 Post-Test Procedures 5-1

5.1 Post-Test Run Procedures 5-1

5.1.1 Post-Test Run Procedures: Dilution Tunnel ... 5-1
5.1.2 Post-Test Run Procedures: Method 5G-1 5-2
5.1.3 Post-Test Run Procedures: Method 5G-2 5-7
5.1.4 Post-Test Run Procedures: Method 5G-3 5-13

5.2 Post-Certification Series Procedures 5-16

5.2.1 Post-Certification Series Metering System Calibration Check 5-16
5.2.2 Acceptable Variation in Calibration 5-16
5.2.3 Leak Check of Metering System 5-17

6.0 Calculations 6-1

6.1 Nomenclature 6-1

6.2 Dry Gas Volume 6-3

6.3 Solvent Wash Blank Correction 6-4

6.4 Total Particulate Weight 6-4

6.5 Particulate Concentration 6-4

6.6 Dilution Tunnel Velocity 6-4

6.7 Average Dilution Tunnel Gas Flow Rate 6-5

6.8 Particulate Emission Rate 6-5

6.9 Proportional Rate Variation 6-5

6.10 Acceptable Results 6-6

6.11 Calculations Unique to Sampling Method 5G-2 6-6

6.12 Calculations Unique to Sampling Method 5G-3 6-6

6.13 Example Calculations 6-7

7.0 Maintenance 7-1

7.1 Pumps 7-1

CONTENTS (Continued)

7.2 Dry Gas Meters 7-1

7.3 Sample Train 7-2

7.4 Inclined Manometer 7-2

7.5 Analytical Balance 7-2

7.6 Rotameters 7-2

7.7 Thermocouples 7-3

7.8 Probe Coolers 7-3

7.9 Filter Frits 7-3

8.0 Auditing Procedure 8-1

8.1 Performance Audits 8-1

8.1.1 Audit of Measurement Systems 8-1
8.1.2 Audit of Data Processing 8-3

8.2 Systems Audit 8-3

9.0 Recommended Standards for Establishing Traceability 9-1

10.0 Reference Method 10-1

11.0 References 11-1

12.0 Data Sheets 12-1

TABLES

Table		Page
1.1	Activity Matrix for Procurement of Apparatus and Supplies	1-33
2.1	Activity Matrix for Calibration of Equipment	2-38
3.1	Activity Matrix for Pretest Procedures	3-37
4.1	Activity Matrix for Test Run Operations	4-5
5.1	Activity Matrix for Post-Test Procedures	5-18
6.1	Activity Matrix for Calculations	6-24
7.1	Activity Matrix for Equipment Maintenance Checks	7-4
8.1	Activity Matrix for Auditing Procedure	8-5

FIGURES

Figure		Page
1.1	Example Procurement Log	1-2
1.2	Dilution Tunnel	1-4
1.3	Type S Pitot Tube-Manometer Assembly	1-9
1.4	Standard Pitot Tube Design Specifications	1-10
1.5	Metering System: Method 5G	1-14
1.6	Sample Collection System: Method 5G-1	1-17
1.7	Sample Collection System: Method 5G-2	1-20
2.1	Type S Pitot Tube-Manometer Assembly	2-2
2.2	Properly Constructed Type S Pitot Tube	2-4
2.3	Types of Face-Opening Misalignment That Can Result from Field Use or Improper Construction of Type S Pitot Tubes	2-5
2.4	Type S Pitot Tube Dimension Specialization Measurements	2-6
2.5	Position of Dimension Measurement	2-7
2.6	Type S Pitot Tube Inspection Data Sheet	2-9
2.7	Pitot Tube Calibration System	2-11
2.8	Pitot Tube Calibration Setup	2-13
2.9	Standard Pitot Tube Design Specifications	2-14
2.10	Pitot Tube Calibration Data	2-16
2.11	Example of Error in Measured Stack Gas Velocity as a Function of Tube Misalignment Along Its Roll Axis (Yaw)	2-17
2.12	Example of Error in Measured Stack Gas Velocity as a Function of Tube Misalignment Along Its Pitch Axis	2-17
2.13	Temperature Monitor Calibration Sheet	2-21
2.14	Differential Pressure Gauge Check	2-23

FIGURES (Continued)

Figure		Page
2.15	Differential Pressure Gauge Calibration Data Sheet	2-24
2.16	Dry Gas Meter Calibration Matrix	2-26
2.17	Calibration Check Apparatus for Wet Test Meter	2-27
2.18	Wet Test Meter Calibration Log	2-29
2.19	Sample Metering System Calibration Setup	2-32
2.20	Meter Box Calibration Data and Calculation Sheet (English Units)	2-33
2.21	Post-Test Dry Gas Meter Calibration Data Sheet (English Units)	2-36
3.1	Precertification Series Checklist	3-2
3.2	Schematic of the Dilution Tunnel Sampling System	3-5
3.3	Dilution Tunnel Traverse Data Sheet	3-8
3.4	Schematic of Method 5G-1 Sampling Train	3-14
3.5	Data Sheet for Gravimetric Determinations (Method 5G-1) ..	3-17
3.6	Pretest Run Data Sheet (Methods 5G-1 and 5G-2)	3-19
3.7	Schematic of Method 5G-2 Sampling Train	3-22
3.8	Data Sheet for Method 5G-2 Gravimetric Determinations	3-25
3.9	Schematic of Method 5G-3 Sampling Train	3-30
3.10	Data Sheet for Method 5G-3 Gravimetric Determinations	3-32
3.11	Pretest Run Data Sheet (Method 5G-3)	3-35
4.1	Sampling Data Sheet 5G	4-3
5.1	Recovery and Analysis Scheme for Method 5G-1	5-4
5.2	Recovery Chart and Analysis Scheme for Method 5G-2	5-8
5.3	Recovery and Analysis Scheme for Method 5G-3	5-14

FIGURES (Continued)

Figure		Page
6.1	Volume of Gas Sample Corrected to Dry Standard Conditions	6-9
6.2	Total Amount of Particulate Matter Collected (Method 5G-1)	6-10
6.3	Total Amount of Particulate Matter Collected (Method 5G-2)	6-11
6.4	Total Amount of Particulate Matter Collected (Method 5G-3)	6-13
6.5	Particulate Concentration	6-14
6.6	Average Dilution Tunnel Gas Velocity	6-15
6.7	Average Dilution Tunnel Gas Flow Rate	6-17
6.8	Particulate Emission Rate	6-18
6.9	Adjusted Particulate Matter Emission Rate	6-19
6.10	Filter Face Velocity Check (Method 5G-3)	6-20
6.11	Dual Train Precision (Method 5G-3)	6-21
6.12	Dry Gas Meter Calibration Factor	6-22
6.13	Adjustment Factor for Alternative Pitot Tube Placement	6-23
8.1	Method 5 Checklist to be Used by Auditors	8-2
12.1	Sheet 5G-1.1 - Procurement Log	12-2
12.2	Sheet 5G-2.6 - Type S Pitot Tube Inspection Data Sheet	12-3
12.3	Sheet 5G-2.10 - Pitot Tube Calibration Data Sheet	12-4
12.4	Sheet 5G-2.13 - Stack Temperature Sensor Calibration Data Sheet	12-5
12.5	Sheet 5G-2.15 - Differential Pressure Gauge Calibration Data Sheet	12-6

FIGURES (Continued)

Figure		Page
12.6	Sheet 5G-2.18 - Wet Test Meter Calibration Log	12-7
12.7	Sheet 5G-2.20 - Dry Gas Meter Calibration Data Sheet (English Units)	12-8
12.8	Sheet 5G-2.21 - Post-Test Dry Gas Meter Calibration Data Sheet (English Units)	12-9
12.9	Sheet 5G-3.1 - Precertification Series Checklist	12-10
12.10	Sheet 5G-3.3 - Pre Test Run Dilution Tunnel Traverse	12-12
12.11	Sheet 5G-3.5 - Data Sheet for Gravimetric Determinations (Method 5G-1)	12-14
12.12	Sheet 5G-3.6 - Pre Test Run Data Sheet (Methods 5G-1 and 5G-2)	12-15
12.13	Sheet 5G-3.8 - Data Sheet for Method 5G-2 Gravimetric Determinations	12-16
12.14	Sheet 5G-3.10 - Data Sheet for Method 5G-3 Gravimetric Determinations	12-17
12.15	Sheet 5G-3.11 - Pre Test Run Data Sheet (Method 5G-3)	12-18
12.16	Sheet 5G-4.1 - Sampling Data Sheet 5G	12-19
12.17	Sheet 5G-8.1 - Method 5 Checklist to Be Used by Auditors	12-20

INTRODUCTION

Quality Assurance Procedures: Method 5G, Determination of Particulate Emissions from Wood Heaters from a Dilution Tunnel Sampling Location has been prepared as an aid for wood heater manufacturers and testing laboratories in both performing the sampling and analysis procedures specified in Method 5G, and in ensuring data quality and reliability. Method 28 must be used for operation of the wood heater when using Method 5G for determining wood heater emissions. Therefore, the user may also refer to Quality Assurance Procedures: Method 28, Certification and Auditing of Wood Heaters.

CONCLUSIONS

It is concluded that these procedures will be helpful in ensuring and establishing the quality of the data when sampling according to the requirements of Method 5G. This will be beneficial for data producing activities including research and development, and as an aid for certification and auditing purposes.

RECOMMENDATIONS

These quality assurance procedures may be used in the individualized quality assurance program established by each user. Copies of the checklists and summary activity matrices provided herein may be supplied to testing personnel to ensure that the described quality assurance procedures are followed. Also, copies of blank data sheets can aid the user in ensuring and establishing data quality in sampling activities.

SUMMARY OF METHOD 5G

Method 5G contains all the requirements for sampling wood heater particulate emissions from a dilution tunnel location and is used in conjunction with EPA Method 28, "Certification and Auditing of Wood Heaters," which contains all the requirements for determining compliance with the New Source Performance Standard (NSPS). Method 5G and Method 28 are in Appendix A, 40 CFR 60. For reference purposes only a complete copy of Method 5G, Appendix A, 40 CFR 60 (53 FR 5884) is included in Section 10.0 of these procedures. Method 5G describes specifications for three sampling train options, each with unique configurations, specifications, and sample recovery procedures. Method 5G also describes specifications for constructing a dilution tunnel for capturing wood heater exhaust and mixing with ambient dilution air. The dilution tunnel provides the locations and conditions for measurement of exhaust gas flow rates and particulate matter concentrations. The method specifically prescribes allowable tunnel dimensions, materials of construction, and minimum distances between airflow obstructions and sampling ports, but some flexibility is allowed on tunnel design and configuration.

The three sampling train options are labeled Methods 5G-1, 5G-2, and 5G-3 in this document. Each of the three sampling options requires that samples be withdrawn from the dilution tunnel at a rate proportional to the dilution tunnel gas flow. Collected particulate matter is determined gravimetrically in each of the three options. The method provides calculation procedures to be used for reporting particulate catches from each of the different sampling train options on a common basis.

The Method 5G-1 sampling train consists of a dual-filter dry sampling train operated at about 0.015 m^3/min (0.5 ft^3/min). Probe and filter types and sizes are specified. Filters are maintained at ambient temperatures, $\leq 32^oC$ (90^oF), and particulate mass collected in the probe and on the filters is determined gravimetrically after removal of uncombined water (uncombined water is water that is removed from the sample catch by desiccation).

The Method 5G-2 sampling train consists of front and back filters plus impingers, and it is operated at 0.003 to 0.015 m^3/min (0.1 to 0.5 ft^3/min).

Particulate matter is collected on two glass fiber filters separated by impingers immersed in an ice bath. The first filter is maintained at a temperature no greater than 120°C (248°F). The second filter and the impinger system are cooled so that the exiting temperature of the gas is maintained at 20°C (68°F) or less. The particulate mass collected in the probe, on the filters, and in the impingers is determined gravimetrically after removal of uncombined water.

The Method 5G-3 sampling train is similar to the 5G-1 train with the following exceptions: (1) sampling train flow rates, probe, filter holder, and filters need not meet the same specifications as the Method 5G-1 train; (2) two simultaneously operated sampling trains are required for each test run; and (3) probe and filter holder assemblies may be weighed directly in order to determine the collected particulate matter mass. Particulate emission rates measured with the two simultaneous sampling trains must be within 7.5% of the average of the two emission rates, or 7.5% of the weighted average emission rate limit in the applicable standard (see Section 7.2.5 of Method 5G), whichever is greater.

QUALITY ASSURANCE PROCEDURES HIGHLIGHTS

EPA Method 5G describes the apparatus and procedures required for sampling wood heater particulate emissions from a dilution tunnel location.

Quality Assurance Procedures: Method 5G, Determination of Particulate Emissions from Wood Heaters from a Dilution Tunnel Sampling Location is to be used as an aid in assembling the testing apparatus, to list and describe the required procedures, to facilitate data reporting, and in particular to describe quality assurance procedures designed to aid in establishing the data quality and reliability of Method 5G emission results. Activity matrices are provided at the end of the appropriate sections for use as a checklist for critical actions performed as a part of Method 5G. For data reporting, Section 12.0 consists of blank data sheets which can be reproduced and used as an aid in data collection and reporting. Examples of the use of these sheets are given in this manual.

A summary of the organization of this manual follows.

1. Procurement of Equipment

Section 1.0 of this manual presents the specifications, criteria, and design features for the equipment and materials required to set up and operate the Method 5G sampling trains and dilution tunnel. This section also informs the user of the apparatus selection options. The activity matrix given at the end of Section 1.0 can be used as a convenient checklist for equipment procurement and initial acceptance check procedures.

2. Calibration

Section 2.0 provides an item-by-item, step-by-step guide to the required calibration procedures and calibration frequencies. Some of the apparatus require calibration before each certification test series, while other pieces of apparatus require calibration as infrequently as annually. An activity matrix is provided at the end of Section 2.0 as a summary of the calibration procedures.

3. Pretest Procedures

Section 3.0 describes procedures conducted prior to each certification test series and prior to each individual test run. These include dilution tunnel cleaning and assembly, equipment checks and calibrations, preliminary dilution tunnel measurements, velocity traverse, sampling train cleaning and checks, sampling and analysis reagent checks, pretest weight determinations, sampling train preparation and assembly, and pretest leak checks. Examples and an activity checklist are provided to assist testing personnel in performing and documenting pretest procedures. The activity matrix at the end of Section 3.0 summarizes the pretest procedures.

4. Test Run Procedures

Section 4.0 lists and describes the activities performed during the test run. These include dilution tunnel operation, sampling train operation, measurement of test run data at 10-min intervals, periodic Pitot tube cleaning and checks, and recording of data. The activity matrix lists each activity performed in the order it occurs during the test run.

5. Post-test Procedures

Section 5.0 describes the activities required at the end of the certification test. Post-test sample train activities include post-test leak checks, sample recovery, and post-test weighings. Quality assurance procedures include a calibration check on the analytical balance for each series of weighings and the recovering, weighing, and reporting of filter blanks. Post-test series procedures include a dry gas meter calibration check. The activity matrix at the end of Section 5.0 summarizes the post-test procedures.

6. Calculations

Section 6.0 describes calculations necessary for performing and reporting Method 5G results. Calculations for determining dry gas volume, solvent wash blanks, total particulate weights and concentrations, emission rates, and proportional rate variations are provided. The activity matrix at the end of Section 6.0 summarizes the calculation procedures.

7. Maintenance

Section 7.0 recommends equipment maintenance procedures. These are summarized in an activity matrix.

8. Auditing Procedures

Section 8.0 describes recommended audit procedures, including both performance audits and system audits. An activity matrix summarizes these procedures.

9. Traceability

Section 9.0 summarizes the recommended standards for establishing traceability.

10. Reference Method

Section 10.0 contains a copy of Method 5G as published in the Federal Register (40 CFR 60.530). Method 5H is also provided as a reference for the Method 5G-2 sampling and analysis alternative.

11. References

Section 11.0 provides the reader with a list of the references used in the preparation of this manual.

12. Data Sheets

Section 12.0 provides data sheets that can be used for calculations, record keeping, and data reporting. These sheets may be removed and duplicated.

1.0 PROCUREMENT OF APPARATUS AND SUPPLIES

As discussed in the summary section of this manual, Method 5G describes sampling and analysis procedures for wood heater particulate emissions testing with a dilution tunnel.* There are three different sampling and analysis options that can be used in Method 5G: Methods 5G-1, 5G-2, and 5G-3. This section lists and describes the apparatus and supplies necessary to assemble a dilution tunnel and to perform wood heater emission tests with the three options. Applicable specifications, criteria, and design features are given to aid in the selection of equipment that will help ensure collection of high-quality data.

During the procurement of apparatus and supplies, a procurement log (Figure 1.1) should be used to record the descriptive title of the equipment, the identification number, if applicable, and the results of an acceptance check. If calibration is required as a part of the acceptance check, the calibration data should also be recorded in a calibration log (see Section 2.0). Table 1.1 at the end of this section summarizes the quality assurance activities for the procurement and acceptance of apparatus and supplies.

Much of the equipment used in the three sampling and analysis options is the same. Also, the dilution tunnel and flow measurement equipment are used for all three options. Because this manual is intended to be used both as a detailed description of the apparatus and supplies and as a quick reference (e.g., for completeness or specification checks), discussion of apparatus and supplies is organized in the following manner. Subsections 1.1, 1.2, 1.3, and 1.10 apply to all three sampling and analysis options; Subsections 1.4 through 1.9 apply to specific options. The subsections are as follows:

1.1 Apparatus and Supplies for Installation of Dilution Tunnel

1.2 Apparatus and Supplies for Dilution Tunnel Flow Measurement

---

*Method 5G, Appendix A, 40 CFR 60 contains the complete requirements for Method 5G test procedures. The quality assurance procedures in this document may be used as an aid in ensuring data quality and reliability.

Item Description	Quantity	Purchase Order Number	Vendor	Date Ordered	Date Received	Cost	Disposition	Comments
Analytical balance	1	R023	Scale-World	12/1/87	12/22/87	$725	in use	calibrated

Figure 1.1. Example Procurement Log

1.3 Apparatus and Supplies for Sampling Train Flow Metering

1.4 Apparatus and Supplies for Sample Collection - Method 5G-1

1.5 Apparatus and Supplies for Sample Collection - Method 5G-2

1.6 Apparatus and Supplies for Sample Collection - Method 5G-3

1.7 Apparatus and Supplies for Sample Recovery and Analysis - Method 5G-1

1.8 Apparatus and Supplies for Sample Recovery and Analysis - Method 5G-2

1.9 Apparatus and Supplies for Sample Recovery and Analysis - Method 5G-3

1.10 Apparatus and Supplies for Calibration Procedures

These subsections list all apparatus and supplies used for Method 5G. Where a detailed description of the item has already been given in a previous subsection, reference is made to that subsection to avoid duplication. However, in the activity matrix (Table 1.1) each item is listed and described for each sampling and analysis option: Methods 5G-1, 5G-2, and 5G-3. This way, Table 1.1 can more easily be used as quick reference.

1.1 Apparatus and Supplies for Installation of Dilution Tunnel

Figure 1.2 shows a dilution tunnel that conforms to the requirements of Method 5G. (An example wood heater is shown for perspective.) The dilution tunnel is used for all three of the Method 5G sampling and analysis options (Methods 5G-1, 5G-2, and 5G-3). The numbered items in Figure 1.2 are described in the corresponding subsections below.

1.1.1 Hood - Method 5G requires that the hood must be constructed of steel and must be at least 0.3 m (1 ft) in diameter at the large (i.e., bottom) end. The small end of the hood must couple with the mixing section duct pipe (see subsection 1.1.4 below). This duct may be from 0.15 to 0.3 m (0.5 to 1 ft) in diameter. The hood and pipe must fit tightly, and sealant should be used to ensure an airtight fit (see subsection 1.1.8 of this manual).

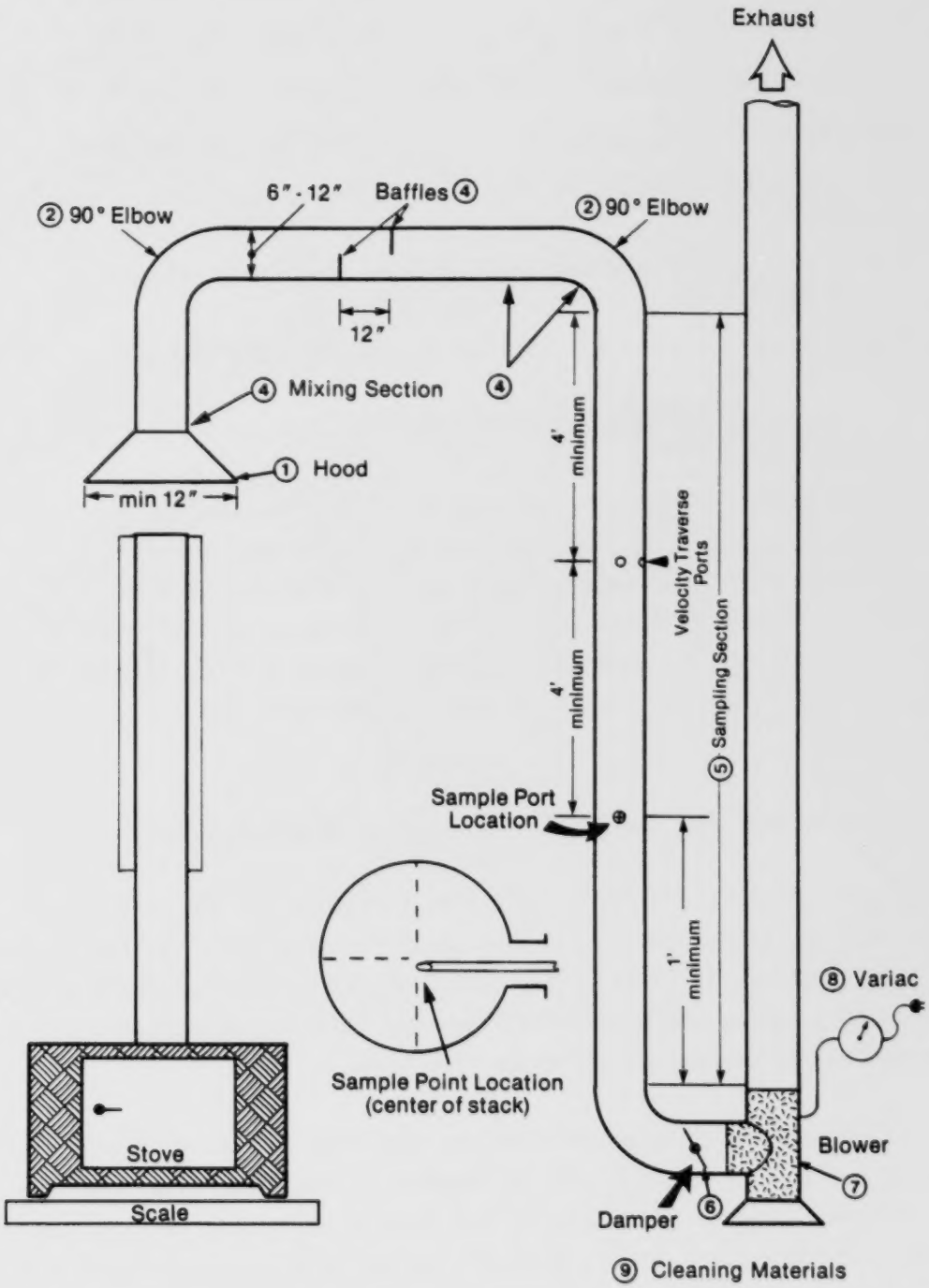

Figure 1.2. Dilution Tunnel

The hood should be located no more than 0.15 m (6 in.) above the insulated solid pack section of the wood heater chimney (see Method 28). This distance can be adjusted to change the draft (vacuum) induced by the dilution tunnel at the wood heater.

The large end of the hood can be of a shape other than round (e.g., square or octagonal). If so, the smallest distance across the face must be at least 0.3 m (1 ft).

1.1.2 90° Elbows - Method 5G requires that two steel 90° elbows must be installed upstream of the sampling section. The elbows should be of standard construction and must fit tightly with the mixing section straight duct pipe. This pipe must be between 0.15 and 0.3 m (0.5 and 1 ft) in diameter. Sealant should be used on pipe joints to ensure an airtight fit. Sheet metal fasteners are recommended for a secure fit.

1.1.3 Mixing Section - The mixing section is the duct pipe section lying horizontally between the hood (subsection 1.1.1) and the sampling section (subsection 1.1.5). This portion of the tunnel consists of straight sections and includes the two 90° elbows. The length of the straight sections may vary according to test lab space configurations, provided that the two 90° elbows are at least 0.3 m (1 ft) apart and the total running length from the hood inlet to the sampling port (see subsection 1.1.5) does not exceed 9.1 m (30 ft). If the mixing section has a larger diameter than the sampling section (which is usually 0.15 m, or 0.5 ft), an adapter section must be used to join the mixing section with the sampling section. All joints must be sealed, and sheet metal fasteners are recommended.

1.1.4 Mixing Baffles - Two steel semicircular baffles must be inserted approximately midway between the two 90° elbows in the mixing section duct. These baffles must be placed 90° to the duct axis about 0.3 m (1 ft) apart. As shown in Figure 1.2, they must be placed on opposite sides of the straight duct. A recommended method for installing baffles is to cut

halfway through the straight steel pipe. Then a steel sheet approximately the thickness of the saw cut width may be inserted and sealed with sealant. This method allows easy cleaning of the mixing section duct after removing the baffles.

1.1.5 Sampling Section - Method 5G requires that a straight steel pipe sampling section must extend for at least 2.7 m (9 ft) downstream from the last mixing duct 90° elbow. This section must be 0.15 m (0.5 ft) in diameter, although a larger diameter is allowed only for high burn rates if minimum gas velocity and dilution rate range are maintained (see subsection 3.2.5). However, larger diameters might not be useable for most appliances to be tested. Therefore, 0.15 m (0.5 ft) diameter pipe is recommended.

The sampling section includes two velocity traverse ports, at 90° to each other, at least 1.2 m (4 ft) downstream of the last mixing section elbow. A sampling port must be located at least 1.2 m (4 ft) downstream of the velocity traverse ports. The sampling port must be at least 0.3 m (1 ft) from the next downstream elbow or damper (if any). Finally, the sampling port must be no more than 9.1 m (30 ft) from the hood inlet.

Beyond these restrictions, the length of the sampling section can conform to the requirements of the test facility. The orientation of the sampling section can be either vertical or horizontal. All joints should be sealed, and sheet metal fasteners are recommended.

1.1.6 Damper (Optional) - A damper is recommended to regulate gas flow in the dilution tunnel. This damper should be installed at least 0.3 m (1 ft) downstream from the sampling port. A solid disk stove pipe damper is recommended for better flow control.

1.1.7 Blower - The blower should be installed downstream from the damper (if used). The blower system must be capable of maintaining a tunnel velocity of at least 220 m/min (12 ft/s) in the sampling section. For 0.15-m (0.5-ft) diameter pipe, this corresponds to a flow of 4 m^3/min

(140 ft^3/min). For larger diameter sampling section pipe, a higher flow must be maintained. To maintain a flow of 4 m^3/min (140 ft^3/min), an actual blower capacity of 14 m^3/min (500 ft^3/min) is recommended. Some system designs may require a larger capacity depending on the ducting and control systems used.

1.1.8 Variac (Optional) - A Variac or voltage regulating device may be used to control blower output. A Variac offers the advantage over a damper in more precise calibration of the flow rate settings.

1.1.9 Wire Chimney Brush - Method 5G requires that the dilution tunnel must be cleaned before each certification test series. A wire chimney brush sized for the diameter pipe must be used. If pipes of different diameters are used for the mixing duct and the sampling section, two appropriately sized wire chimney brushes must be used. Alternatively, a solvent soaked brush or cloth may be used.

1.1.10 Miscellaneous Equipment for Installation of Dilution Tunnel - Miscellaneous equipment and supplies not specifically listed in the preceding subsection headings include the following:

1. High-temperature sealant - room temperature vulcanizing (RTV) or other suitable material.
2. Sheet metal fasteners - screws, nuts and bolts, or other suitable fasteners for securing pipe sections together.
3. Brackets and braces or other suitable devices to support the dilution tunnel securely.
4. Exhaust ducting as needed.
5. Hand tools such as drill, hacksaw, tin snips, stove pipe crimping tool, and other equipment as needed.

1.2 Apparatus and Supplies for Dilution Tunnel Flow Measurement

Either a Type S or a standard Pitot tube-manometer assembly may be used to measure the gas velocity in the dilution tunnel for all three of the Method 5G sampling and analysis options (Methods 5G-1, 5G-2, and 5G-3). Figure 1.3 shows the Type S Pitot tube-manometer assembly. Figure 1.4 shows an equivalent assembly using a standard Pitot tube.

1.2.1 Pitot Tube - This subsection describes the two alternative Pitot tube designs that may be used in Method 5G: either a Type S Pitot tube or a standard Pitot tube. These must conform to the specifications of EPA Method 2, Section 2.1. In general, standard Pitot tubes are more prone to clogging due to the small static pressure holes. Type S Pitots are more tolerant of misalignment.

1.2.1.1 Type S Pitot Tube - The Pitot tube must be constructed of metal tubing (e.g., 304 or 316 stainless steel) with an external tubing diameter (D) between 0.48 and 0.95 cm (3/16 and 3/8 in.). The major criteria in Pitot tube construction material are durability and corrosion resistance. Upon receiving a new Pitot tube, inspect it to determine if it was constructed according to the configuration in Figure 1.3. Repair, replace, or return to the manufacturer any Type S Pitot tube which does not meet the face opening specifications outlined in Section 2.1 of this manual. A Type S Pitot tube constructed according to the specifications in Section 2.1 of this manual will have a coefficient of 0.84. For other configurations, the coefficient must be determined. This procedure is described in Section 2.1 of this manual.

1.2.1.2 Standard Pitot Tube - A standard Pitot tube may be used in place of a Type S Pitot tube. Upon receiving a new standard Pitot tube, inspect it to determine if it meets the following design criteria:

1. The tip is of the hemispherical (shown in Figure 1.4), ellipsoidal, or conical design.

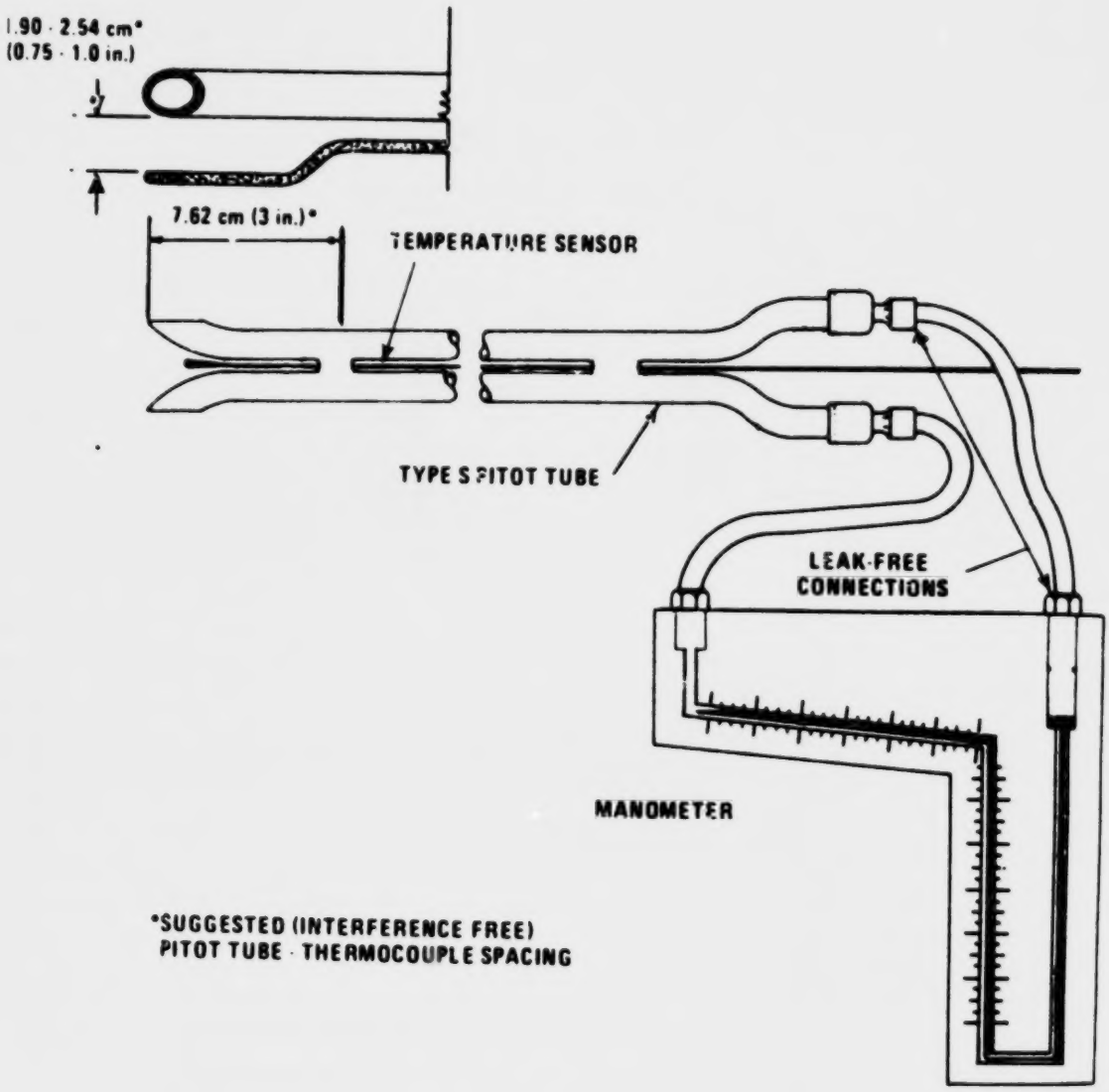

Figure 1.3. Type S Pitot Tube-Manometer Assembly

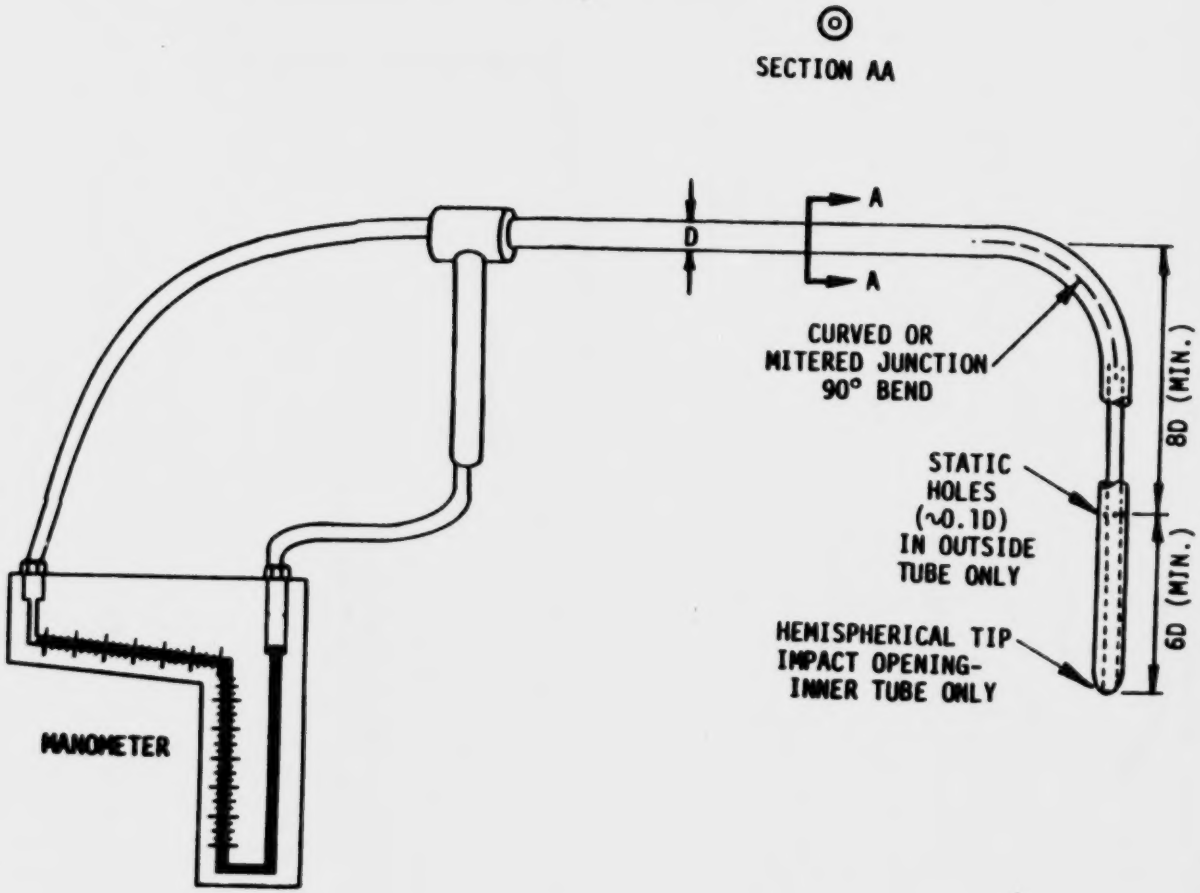

Figure 1.4. Standard Pitot Tube Design Specifications

2. There is a minimum straight run of 6 diameters (based upon D, the external diameter of the tube) between the tip and static pressure holes.

3. There is a minimum straight run of 8 diameters between the static pressure holes and the centerline of the external tube, following the 90° bend.

4. The static pressure holes are of equal size (approximately 0.1 x D), equally spaced in a piezometer ring configuration.

5. It has a 90° bend, with curved or mitered junction.

Repair, replace, or return to the manufacturer any standard Pitot tube which does not meet the above criteria. A standard Pitot tube is assumed to have a coefficient of 0.99 $\pm$ 0.01 and need not be calibrated. A damaged standard Pitot tube should be replaced rather than recalibrated.

1.2.2 Differential Pressure Gauge (Manometer) - Method 5G requires that an inclined manometer or other equivalent device be used to measure the velocity head (Δp) readings continuously throughout the wood heater test. The differential pressure gauge is also used to measure static pressure in the dilution tunnel (optional). An additional manometer (optional) is used if an orifice pressure drop (ΔH) occurs at the dry gas meter output.

Figure 1.3 shows an inclined-vertical manometer. This type is suitable if the graduations on the inclined scale indicate 0.26 mm H_2O (0.01 in. H_2O) or less. The resolution should be readable to 0.13 mm H_2O (0.005 in. H_2O).

Upon receipt of a new manometer, leak check it by using the following procedure:

1. Level and zero the manometer.

2. Vent both sides of the manometer to the atmosphere.

3. Place Tygon tubing, or equivalent, on the positive leg of the manometer and blow into the tubing to displace the liquid to at least 30% of scale.

4. Close off the open end of the tubing and observe the manometer for 15 s. If there is no change in the reading, the positive side of the manometer is leak free.

5. Repeat steps 3 and 4 for the negative side of the manometer, but use suction to produce the manometer reading.

Repair, replace, or return to the manufacturer any manometer which does not pass this leak check.

If differential pressure gauges other than inclined manometers are used (e.g., Magnehelic or electronic gauges), calibrate the gauges upon receipt by using the procedures described in Section 2.4 of this manual.

1.2.3 Temperature Gauge - A thermocouple, liquid-filled bulb thermometer, or other means of measuring temperature to within 1.5% of the minimum absolute stack temperature is required. Upon receipt, check the temperature gauge for damage and then calibrate it according to the procedure in Section 2.2.

1.2.4 Barometer - A device to measure atmospheric pressure in the sampling area is required. If the wood heater is operated at a different pressure than the sampling area (e.g., a pressurized test lab), a separate barometer is required for each area. Upon receipt, calibrate the barometer according to the procedure in Section 2.3 of this manual. Mercury-in-glass barometers need not be calibrated.

1.2.5 Miscellaneous Equipment for Measuring Dilution Tunnel Flow - This subsection lists miscellaneous equipment and supplies not listed in the preceding subsection headings. This list includes:

1. Tubing and fittings as necessary.
2. Square to align Pitot tube during velocity traverse and velocity head Δp readings.
3. Bracket and clamps to firmly secure Pitot assembly to the dilution tunnel pipe.
4. Sealant, rubber plug, or other means to seal air leakage at the Pitot tube port.

5. Manometer fluid (if a liquid filled manometer is used).

6. Rule or depth gauge suitable for measuring dilution tunnel inside diameter at the velocity probe ports.

1.3 Apparatus and Supplies for Sample Train Metering System

Figure 1.5 shows an example of a suitable sample train metering system. This or an equivalent assembly is used for each of the Method 5G sampling and analysis options (Methods 5G-1, 5G-2, and 5G-3). For Method 5G-3, two separate metering systems are required, one for each of the sampling trains. Figure 1.5 includes both required and recommended or optional equipment.

The sample train metering system can be purchased as a unit or assembled by the test facility. Guidelines for construction of a meter box assembly are given in APTD-0581.[2] When constructing a metering system, the specifications listed in this section should be followed. Upon receipt or after construction of the metering system, both a positive and a negative pressure leak check should be performed before beginning the calibration procedure described in Section 2.5 of this manual. The metering system consists of the following components.

1.3.1 Dry Gas Meter - A dry gas meter is required that will measure volume to within 1% at a sampling flowrate of approximately 0.015 m^3/min (0.5 ft^3/min). If Method 5G-3 is used, two meters are used, and both must be within 1% accuracy in the sampling rate range encountered during testing. The dry gas meter should have a face value, i.e., one revolution value, of from 1 to 3 L (0.03 to 0.1 cfm). Upon receipt and after leak check, the dry gas meter should be checked for calibration according to the procedure described in Section 2.5 of this manual. Meters with erratic performance or failing to calibrate should be returned to the supplier or repaired.

1.3.2 Vacuum Pump - For Methods 5G-1 and 5G-2, a vacuum pump that can maintain a flow of 0.02 to 0.03 m^3/min (0.66 to 1.1 ft^3/min) is required. Two vacuum pumps are required for Method 5G-3, and lower flowrates are

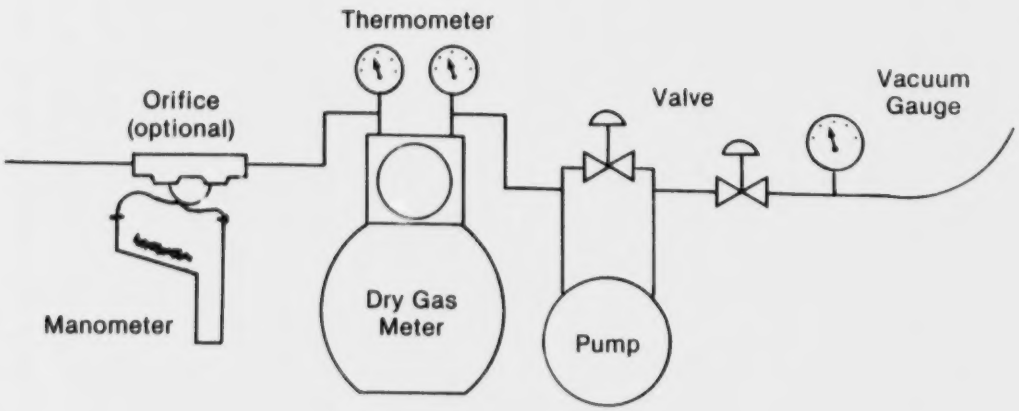

Figure 1.5. Metering System: Method 5G

allowed. The vacuum pump must be leak free at a vacuum of 130 mm Hg (5 in. Hg) or the greatest vacuum anticipated during sampling. Upon receipt, the vacuum pump should be checked for leakage and capacity. Pumps failing to meet specifications should be repaired or returned to the supplier.

1.3.3 Temperature Gauge - At least one temperature gauge is required, and two are recommended for each dry gas meter. The temperature gauge must be accurate to within 1.5% of the absolute temperature in the operating temperature range of the dry gas meter. Upon receipt, the temperature gauge should be checked for damage (i.e., dents or bent stems) and calibrated against a mercury-in-glass thermometer according to the procedures in Section 2.2 of this manual.

1.3.4 Vacuum Gauge - A vacuum gauge is required to measure the vacuum upstream of the vacuum pump. It is necessary to record the greatest vacuum reached during sampling to determine the maximum vacuum required for the post-test leak check (see subsection 5.1.2). Also, a high vacuum during sampling is an indication of filter clogging. The range of the vacuum gauge should be between 0 and 750 mm Hg (30 in. Hg).

1.3.5 Differential Pressure Gauge (Optional) - A differential pressure gauge or manometer should be used if there is an orifice or pressure drop downstream of the dry gas meter. The differential pressure gauge is described in subsection 1.2.2 of this manual. One manometer for each sampling train is needed.

1.3.6 Orifice (Optional) - As described in APTD-0581[2] or equivalent.

1.3.7 Rotameter (Optional) - A rotameter may be used to facilitate sample train flow adjustments to maintain proportional rate sampling. The rotameter should be accurate in the sampling flow range encountered, about 0.015 m^3/min (0.5 ft^3/min) for Methods 5G-1 and 5G-2, less for Method 5G-3. Upon receipt, the rotameter should be calibrated according to the procedures in subsection 2.5.2 of this manual.

1.3.8 Miscellaneous Equipment for Sample Train Metering System - Miscellaneous equipment and supplies not specifically listed in the preceding subsection headings include the following:

1. Tubing, fittings, and clamps that are necessary to assemble the sample train metering system.
2. Flow control valves to control sampling flow.
3. Variac to control vacuum pump in lieu of, or in addition to, flow control valves.
4. Pump oil as needed for the vacuum pump and dry gas meter.

1.4 Apparatus and Supplies for Sample Collection - Method 5G-1

Figure 1.6 shows an example of suitable sample collection apparatus used for Method 5G-1. This equipment is used upstream of the sample train metering system described in the preceding subsection. Figure 1.6 shows both required and optional or recommended equipment.

1.4.1 Probe - Method 5G-1 requires that a sample probe must be of glass or stainless steel (316 or a grade more corrosion resistant). The probe should be about 95 mm (3/8 in.) ID and 0.6 m (24 in.) in length. If made of stainless steel, the probe must be constructed from seamless tubing. The probe tip can be straight (i.e., a nozzle end is not required).

1.4.2 Probe Cooling System (Optional) - A probe cooling system is recommended to keep the filter assembly temperature under the required limit of 32°C (90°F). A cooling system can be purchased or constructed that circulates ice water around the probe. The cooling capacity needed depends on the dilution tunnel gas temperature, the sample flow rate, and the ambient temperature. An absorbant wrap (e.g., towel) and bucket of ice water may be sufficient to cool the gases under some conditions.

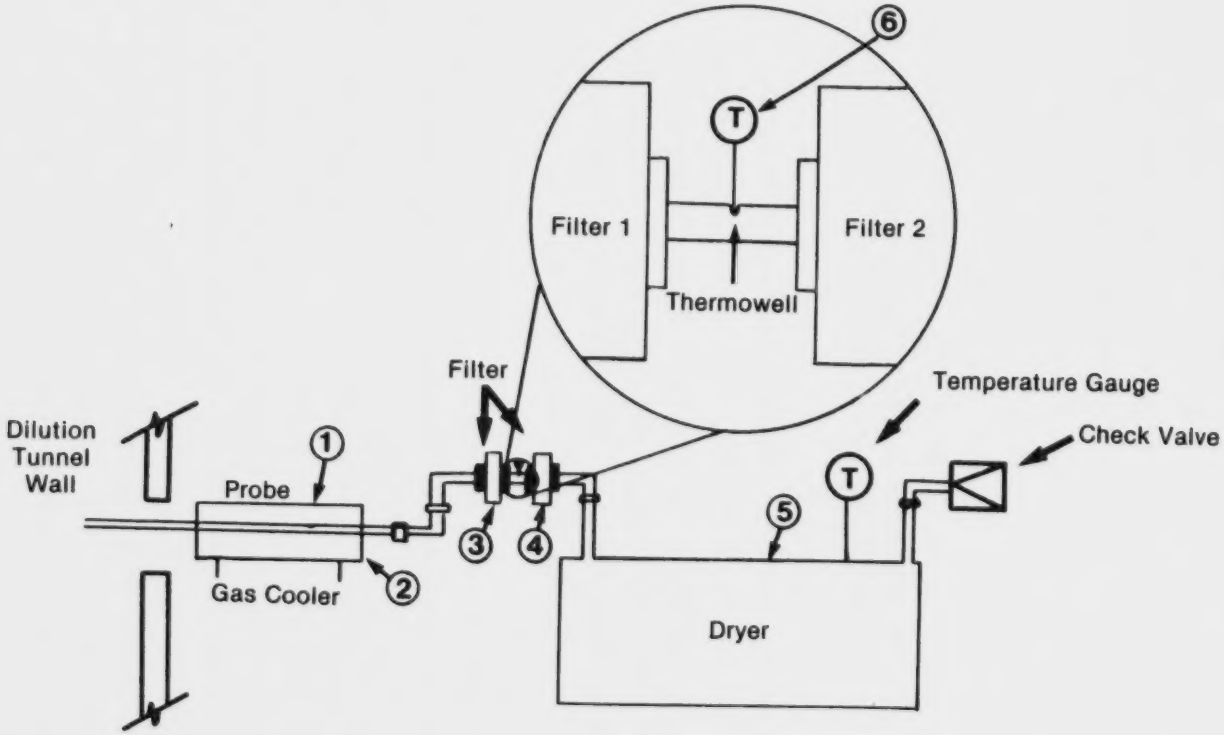

Figure 1.6. Sample Collection System: Method 5G-1

1.4.3 Filter Holders - Two filter holders are required for each sampling train. One additional filter holder must be used for the required blank filter. Acceptable materials for the filter holders are borosilicate glass, stainless steel, or Teflon. Each filter holder must use a silicone rubber, Teflon, or Viton gasket. Teflon is recommended for easier filter removal. The filter must be supported by a glass frit or stainless steel filter support. The filter holders must be placed in series, with the backup filter holder located 25 to 100 mm (1 to 4 in.) downstream of the primary filter holder. Filters should face forward. For Method 5G-1, the filter holders must be capable of holding a 100-mm (4-in.) diameter filter. For Methods 5G-2 and 5G-3, smaller diameters are acceptable (see subsections 1.5.2 and 1.6.3 of this manual).

1.4.4 Filter Temperature Monitor - The temperature gauge must be capable of measuring temperature to within 1.5% of the lowest anticipated absolute temperature of the filter assembly. This level of accuracy corresponds to approximately $\pm 4.4^{o}C$ ($7.9^{o}F$). The temperature gauge may be installed on either side of the primary filter holder. The sensing tip of the temperature gauge must be in direct contact with the sample gas or situated in a thermowell as in Figure 1.6.

Upon receipt, the temperature gauge should be inspected for damage and calibrated according to the procedures in Section 2.2 of this manual.

1.4.5 Dryer - The drying system must be capable of removing water from the sample gas to less than 1.5% moisture (by volume) prior to the metering system. The drying system must include a temperature gauge to measure the temperature of the sample gas exiting the dryer. This temperature must be maintained below $20^{o}C$ ($68^{o}F$) during certification testing.

A dryer system may consist of a condenser-ice bath with a desiccant tube. One suitable dryer system is the impinger train described in subsection 1.5.3 of this manual, except the final filter assembly is not

included. Silica gel or other suitable desiccant material can be used. The dryer should be constructed so that the desiccant material is visible in order to determine the degree of moisture saturation by color change.

A "desiccant only" system may also be used. In such cases, a wet bulb-dry bulb psychrometer must also be used to demonstrate that the moisture has been removed to less than 1.5% by volume.

The dryer system temperature monitor must meet the same specifications listed for the filter temperature monitor in subsection 1.4.4.

1.4.6 Miscellaneous Equipment for Sample Collection - Method 5G-1 - This subsection lists miscellaneous equipment not specifically listed in the above subsection headings. This equipment includes the following:

1. Glass tubing and tubing clamps - leakproof fittings as required to connect probe, filter holders, and dryer assembly.
2. Tubing and fittings as needed to connect sampling system with metering system.
3. Filter holder support bracket as needed.
4. Stopcock grease - acetone insoluble silicone grease for fittings.
5. Desiccant - indicating-type silica gel, anhydrous calcium sulfate, calcium chloride, or other equivalent material.
6. Crushed ice as needed for gas cooler and dryer systems.
7. Bracket and clamp to secure sampling probe to dilution tunnel if needed.
8. Check valve (optional) between sample collection system and metering system.

1.5 Apparatus and Supplies for Sample Collection - Method 5G-2

Figure 1.7 shows an example of the sample collection system used in Method 5G-2. This equipment is used upstream of the sample train metering system already described in Section 1.3 of this manual. Where the equipment used in Method 5G-2 sample collection is the same as that used in

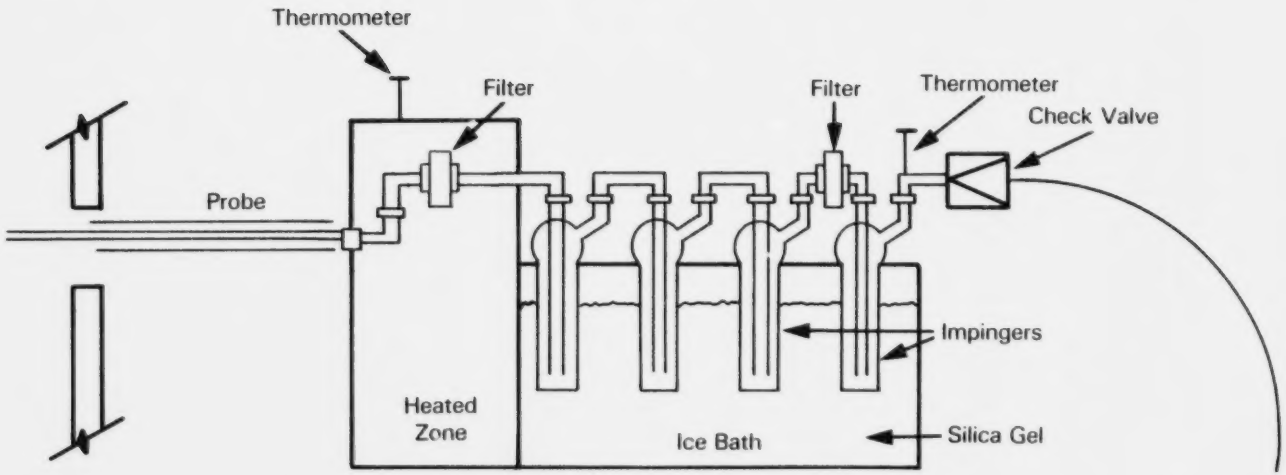

Figure 1.7. Sample Collection System: Method 5G-2

Method 5G-1, the reader is referred to Section 1.4 of this manual for procurement specifications. Details of the equipment not previously described in Section 1.4 are given in the following subsections.

1.5.1 Probe - The probe is similar to the probe described in subsection 1.4.1 of this manual except that the probe must be no longer than 0.6 m (2 ft). A probe heater can be used, but is not required.

1.5.2 Filter Holders - Three borosilicate glass filter holder assemblies are required, each with a glass frit or stainless steel filter support, two for the sample filters and one for the blank filter. A silicone rubber, Teflon, or Viton gasket must be used. The holder design must provide a positive seal against leakage from the outside or around the filter. The holder should be durable, easy to load, and leak free in normal applications. The first filter holder is positioned immediately following the probe, with the filter facing toward the flow. The second filter holder is attached directly to the outlet of the third impinger and upstream of the inlet to the fourth (silica gel) impinger. A filter size of 100 mm (4 in.) is recommended for the front filter and 47 mm (2 in.) for the rear filter.

1.5.3 Filter Heating System (Optional) - Any heating system may be used which is capable of maintaining the filter holder at no greater than 120°C (248°F) during sampling. If a heating system is used, a temperature gauge capable of measuring temperatures to within 1.5% of absolute temperature should be provided to monitor the temperature around the filter during sampling.

Upon purchase, the heating system and the temperature monitoring device should be checked. The heating element should be easily accessible in case of a malfunction during sampling.

1.5.4 Impinger Train (Condenser) - The condenser is used to collect condensible material in the sampled gas and to reduce the gas moisture content. Four impingers should be connected in series with leak-free

ground-glass fittings or any similar noncontaminating fittings. The first, third, and fourth impingers must be the Greenburg-Smith design modified by replacing the tipped or plate portion with a glass tube that has an unconstricted 13 mm (0.5 in.) ID and that extends to within 13 mm (0.5 in.) of the flask bottom. The second impinger must be a Greenburg-Smith with the standard tip and plate. Modifications, for example, using flexible connections between impingers, using materials other than glass, or using a flexible vacuum hose to connect the filter holder to the condenser, may be used if approved by the Administrator. The fourth impinger outlet connection must allow insertion of a thermometer capable of measuring to 1.5% of the absolute temperature in the range of 0° to $25^{o}C$ (32° to $77^{o}F$).

Upon receipt of a standard Greenburg-Smith impinger, the user should fill the inner tube with water. If the water does not drain through the orifice in 6 to 8 s or less, the impinger tip should be replaced or enlarged to prevent an excessive pressure drop in the sampling system. Each impinger should be checked visually for damage, breaks, cracks, or manufacturing flaws such as poorly shaped connections.

1.5.5 Miscellaneous Equipment for Sample Collection - Method 5G-2 - This subsection lists miscellaneous equipment not specifically listed in the above subsection headings. The equipment includes the following:

1. Glass tubing and tubing clamps - leakproof fittings as required to connect probe, filter holders, and impingers.

2. Tubing and fittings as needed to connect sampling system with metering system.

3. Probe or filter holder support brackets as needed.

4. Stopcock grease for fittings - acetone insoluble silicone grease.

5. Crushed ice for impinger train condenser.

6. Desiccant for fourth impinger - indicating-type silica gel, anhydrous calcium sulfate, calcium chloride, or other equivalent material.

7. Check valve (optional) between sampling collection system and metering system.

1.6 Apparatus and Supplies for Sample Collection - Method 5G-3

Method 5G-3 requires two sampling trains operating simultaneously. The apparatus shown in Figure 1.6, as required for Method 5G-1, meets the requirements for each Method 5G-3 sampling train. However, in general, the specifications for Method 5G-3 are not as stringent (i.e., some of the Method 5G-1 size and material specifications are not required for Method 5G-3). Where the equipment used in Method 5G-3 sample collection is the same as that used in Method 5G-1, the reader is referred to Section 1.4 of this manual for procurement specifications. The equipment for Method 5G-3 is described in the following subsections.

1.6.1 Probe - The two probes are the same as the single probe described in subsection 1.4.1 of this manual except that the size is not specified. A third probe should be used as a blank. Because the probes are weighed directly, the recommended size is 6.4 mm (0.25 in.) ID and 0.3 m (12 in.) in length. Also, stainless steel is not recommended as a material. Glass or plastic can result in more accurate weighing because of lower tare weights.

1.6.2 Probe Cooling System (Optional) - Same as in subsection 1.4.2 of this manual except the same system can be used to cool both probes if desired. Because Method 5G-3 will generally use a lower sample flow rate, less cooling capacity is required for Method 5G-3.

1.6.3 Filter Holders - Five filter holders are required, two for each sampling train and one for the blank filter. Filter holders can be of glass, plastic materials such as Nalgene, or polycarbonate materials. Filter diameter is not specified, but filter face velocity must not exceed 150 mm/s (30 ft/min) (see Section 4.2). A minimum filter diameter of 47 mm (2 in.) is recommended. The filter holders should be leak free. The Gelman 1119 filter holder has been found suitable for this purpose. If

plastic or polycarbonate filter holders are used, do not use solvents in sample recovery or cleaning. Instead, direct weighing should be used. Isopropyl alcohol or methanol is recommended for cleaning.

1.6.4 Filter Temperature Monitor - Two filter temperature monitors are required. Same as specified in subsection 1.4.4 of this manual.

1.6.5 Dryer - Two are required. Same as specified in subsection 1.4.5 of this manual.

1.6.6 Miscellaneous Equipment for Sample Collection - Method 5G-3 - Same as in subsection 1.4.6 of this manual.

1.7 Apparatus and Supplies for Sample Recovery and Analysis - Method 5G-1

This section lists and describes the equipment required to perform the sample recovery and analysis procedures of Method 5G-1. Optional and recommended equipment is also described. Much of the equipment used for Method 5G-1 is also used in Methods 5G-2 and 5G-3. A complete description of these items is given in this section.

1.7.1 Probe Brush - A nylon bristle brush with a stainless steel wire handle is recommended. The probe brush must be at least as long as the probe. A separate, smaller, and very flexible brush should be used for the nozzle, if a nozzle is used.

1.7.2 Wash Bottles - Two 500-mL wash bottles are recommended for probe and glassware rinsing. Glass or Teflon bottles are preferred, but polyethylene is acceptable. However, if polyethylene is used, it is recommended that it not be used for acetone storage for longer than a month.

1.7.3 Sample Storage Containers - Five sample storage containers are recommended. They should be 500 or 1000 mL and made of chemically resistant borosilicate glass. If sample analysis is performed at a location different

from the sample collection, the bottles must have leakproof screw caps with leakproof, rubber-backed Teflon cap liners, or they must be constructed to preclude leakage and to resist chemical attack. Wide mouthed bottles are easiest to use, but narrow mouth bottles are less prone to leakage. As an alternative to glass, polyethylene bottles may be used, but storage times should not exceed one month.

Prior to use and upon purchase, the cap seals and the bottle cap seating surfaces should be inspected for chips, cuts, cracks, and manufacturing deformities that would allow leakage.

1.7.4 Petri Dishes - Glass or polyethylene petri dishes are recommended for storage and for transportation of the filter and collected sample. Use one for each sample filter and one for the blank filter. Petri dishes may be used in place of glass weighing dishes.

1.7.5 Funnel - A glass or polyethylene funnel is used to aid in sample recovery.

1.7.6 Glass Weighing Dishes - Borosilicate glass dishes should be used to facilitate filter weighing. A total of three are needed for each run: two for the sample filters and one for the blank filter.

1.7.7 Beakers - Two 250-mL glass beakers are required for evaporation of the acetone rinse, one for sample recovery and one for a blank.

1.7.8 Hygrometer - A sling psychrometer or other humidity gauge is needed to measure the relative humidity in the sample analysis area. This can be the same instrument used in the wood heater testing area as required in Method 28. The hygrometer must be accurate to $\pm$3% relative humidity.

1.7.9 Temperature Gauge - A thermometer or temperature gauge is used to measure the temperature in the analysis area. It should be accurate to within 1.5% of the absolute temperature.

1.7.10 Desiccator - A desiccator should be constructed to desiccate filters and weighing dishes before use and during sample recovery and analysis procedures. An indicating type desiccant such as anhydrous calcium sulfate is required. The desiccator should be constructed from clear Plexiglas or other transparent material to allow viewing the desiccant. Desiccant should be replaced before it indicates saturation.

1.7.11 Filters - Two filters are required for each test run, plus one additional blank filter for the test series. Glass fiber filters without organic binders must be used. The filters must exhibit at least 99.95% collection efficiency of a 0.3-um dioctyl phthalate smoke particle, in accordance with ASTM standard Method D2986-71.[5] Manufacturer's quality control test data are sufficient for validation of efficiency. Filters should be checked visually for tears by holding them up against a light. The filter diameter must be at least 100 mm (4 in.). The Gelman A/E 61631 filter is suitable for this purpose.

1.7.12 Acetone - Reagent grade acetone with no more than 0.001% residue when evaporated in glass bottles must be used for sample recovery. Acetone supplied in metal containers is unacceptable because of the prevalently high residue levels. An acetone blank test should be performed before use, and the acetone must be rejected if the blank residue is greater than 0.001% of the total acetone weight.

1.7.13 Analytical Balance - An analytical balance is required that is capable of weighing the filters and sample beakers to within 0.1 mg in a range of from 0.1 mg to 200 g. The balance should be calibrated upon receipt and checked before each use. See Section 2.7 for calibration procedures.

1.7.14 Drying Oven (Optional) - A drying oven is used to evaporate acetone to determine the blank weight. The oven should be capable of maintaining temperature of 105°C (220°F) for 2 to 3 h. This oven may also be used

to determine filter, beaker, and probe tare weights according to the procedures described in Section 4.0 of this manual.

1.7.15 Miscellaneous Equipment for Sample Recovery and Analysis - Method 5G-1 - This subsection lists miscellaneous equipment not included in the preceding subsection headings. This equipment includes the following:

1. Tweezers to transfer filters.
2. Disposable surgical gloves to handle filters and other apparatus during analysis.
3. Dry nylon bristle brush to clean out filter holders and other apparatus during sample recovery.
4. Sample dish labels and marking pen to label filters and apparatus.

1.8 Apparatus and Supplies for Sample Recovery and Analysis - Method 5G-2

This section lists the apparatus and supplies necessary for performing the sample recovery and analysis procedures of Method 5G-2. Since some of the apparatus is described in the preceding section for Method 5G-1, only apparatus not previously listed is described in this section.

1.8.1 Probe Brush - Same as in subsection 1.7.1 of this manual.

1.8.2 Wash Bottles - Same as in subsection 1.7.2 of this manual.

1.8.3 Sample Storage Containers - Same as in subsection 1.7.3 of this manual except that nine containers are recommended.

1.8.4 Petri Dishes - Same as in subsection 1.7.4 of this manual.

1.8.5 Graduated Cylinder and/or Triple Beam Balance (Optional) - Either a graduated cylinder or a triple beam balance may be used to measure the water condensed in the impingers during sampling. These are not required if

sample gas water content is not measured (i.e., assumed to be 4% default). Additionally, the graduated cylinder may be used to measure water initially placed in the first and second impingers. In either case, the required accuracy is 1 mL or 1 g; therefore, the cylinder must have subdivisions $\leq$2 mL. Most triple beam balances are capable of weighing to the nearest 0.5 g or less.

1.8.6 Plastic Storage Containers - Several airtight plastic containers are required for storage of silica gel.

1.8.7 Funnel and Policeman - A funnel and rubber policeman are needed to transfer the used silica gel from the impinger to a storage container unless silica gel is weighed immediately after the test. A Teflon policeman is helpful for recovery of the filter.

1.8.8 Weighing Dishes - Same as in subsection 1.7.6 of this manual.

1.8.9 Desiccator - Same as in subsection 1.7.10 of this manual.

1.8.10 Beakers - Same as in subsection 1.7.7 of this manual.

1.8.11 Hygrometer - Same as in subsection 1.7.8 of this manual.

1.8.12 Temperature Gauge - Same as in subsection 1.7.9 of this manual.

1.8.13 Separatory Funnel - A funnel of glass or Teflon, 500 mL or larger, is required.

1.8.14 Filters - Same as in subsection 1.7.11 of this manual except that no minimum size is specified. A minimum diameter of 47 mm (2 in.) is recommended.

1.8.15 Silica Gel - Indicating-type silica gel, 6-16 mesh, is required for the fourth impinger.

1.8.16 Distilled Water - When material collected by the impingers is to be analyzed, deionized distilled water must be used. The water must meet ASTM Specification D1193-77, Type 3 for deionized distilled water.[6] A water blank should be analyzed before use to prevent false high values on test samples.

1.8.17 Stopcock Grease - An acetone-insoluble, heat-stable silicone grease must be used when the sealing of ground-glass connections is required. This is not necessary if screw-on connectors with Teflon sleeves are used.

1.8.18 Acetone - Same as in subsection 1.7.12 of this manual.

1.8.19 Dichloromethane - Approximately 500 mL of reagent grade (i.e., <0.001% residue in glass bottles) dichloromethane is required for each test series. This includes a recommended 75-mL blank sample.

1.8.20 Analytical Balance - Same as in subsection 1.7.13 of this manual.

1.8.21 Miscellaneous - Same as in subsection 1.7.15 of this manual.

1.9 Apparatus and Supplies for Sample Recovery and Analysis - Method 5G-3

Sample recovery and analysis procedures for Method 5G-3 are similar to Method 5G-1 except that (1) the probe, tubing, and filter holder may be weighed directly instead of washed with acetone; (2) two sets of sample recovery equipment must be analyzed, one set for each sample train; and (3) the filters can be less than 100 mm (4 in.) in diameter. For completeness, apparatus and supplies for Method 5G-3 are listed below. Where apparatus is similar to that for Method 5G-1, reference is given to the appropriate subsections in Section 1.7 of this manual for details and specifications. Where specifications or recommendations differ from those of Method 5G-1, the specification or recommendation is given in the following subsections.

1.9.1 Probe Brush - Same as in subsection 1.7.1 of this manual. For Method 5G-3, a probe brush is necessary to clean the probe before pretest desiccation and weighing. It is used for sample recovery if probe catch is determined by solvent recovery rather than by direct weighing.

1.9.2 Petri Dishes - Same as in subsection 1.7.4 of this manual.

1.9.3 Weighing Dishes - Same as in subsection 1.7.6 of this manual. At least five weighing dishes are recommended: one for each sample filter and one for the blank filter.

1.9.4 Hygrometer - Same as in subsection 1.7.8 of this manual.

1.9.5 Temperature Gauge - Same as in subsection 1.7.9 of this manual.

1.9.6 Filters - Same as in subsection 1.7.11 except that the filter diameter can be less than 100 mm (4 in.) and four filters are required for each run, plus one additional blank filter for the test series. A minimum diameter of 47 mm (2 in.) is recommended.

1.9.7 Acetone - Reagent grade acetone is used to clean the probe and filter holder assembly prior to pretest desiccation and weighing. Note: If plastic or polycarbonate probes or filter holders are used, solvents such as acetone should not be used.

1.9.8 Desiccator - Same as in subsection 1.7.10 of this manual.

1.9.9 Analytical Balance - Same as in subsection 1.7.13.

1.9.10 Miscellaneous - Same as in subsection 1.7.14 of this manual.

1.10 Apparatus and Supplies for Calibration Procedures

In addition to the apparatus and supplies needed to perform the sampling and analysis procedures of Method 5G, some specialized equipment is needed to perform the calibration procedures as described in Section 2.0 of this manual. This equipment is listed and described in the following subsections.

1.10.1 Wet Test Meter - A wet test meter can be used to calibrate the reference dry gas meter (see subsection 1.10.2). Alternatively, most gas companies will calibrate dry gas meters. Wet test meters are calibrated by the manufacturer to an accuracy of within 1%. Wet test meters should be recalibrated yearly by using the procedures described in Section 2.5 of this manual. Additional apparatus and supplies are required for wet test meter calibration procedures. These are described in Section 2.5 (see Method 5G, Section 5.2.1).

1.10.2 Reference Dry Gas Meter - A reference dry gas meter is required. This meter is used to check the calibration of the sampling dry gas meter after each test series. The reference dry gas meter should be calibrated upon receipt to a calibration factor of 1.0 $\pm$ 0.01, and annually thereafter. This calibration procedure is described in Section 2.5 of this manual. Alternatively, most gas companies can recalibrate dry gas meters.

1.10.3 Pitot Tube Calibration Assembly - Pitot tubes constructed to the specifications given in Section 2.1 of this manual can be assumed to have the following coefficients: 0.99 for a standard Pitot tube and 0.84 for a Type S Pitot tube. If these specifications are not met, and for verification, a Pitot tube calibration assembly can be constructed according to the procedures described in Section 2.1 of this manual.

1.10.4 Mercury-in-Glass or ASTM Thermometer - A mercury-in-glass or other ASTM-certified thermometer is required to perform the temperature gauge calibration procedures described in Section 2.2 of this manual.

1.10.5 Mercury-in-Glass Barometer - A mercury-in-glass reference barometer is required. Alternatively, follow the procedures in Section 2.3 of this manual.

1.10.6 Reference Differential Pressure Gauge - A gauge-oil inclined manometer is required to calibrate other types of pressure gauges. See Section 2.4 of this manual for this procedure.

1.10.7 Analytical Balance Calibration Weights - Two types of calibration weights may be used for the analytical balance: Class F for the pretest audit and Class S for semiannual calibration.

The pretest audit must agree to within 0.1 mg of the calibration weight. Also, the pretest calibration weight must be from 50 to 150% of the desiccated filter weight (about 0.13 g for a 47-mm filter and 0.63 g for a 110-mm filter). Since Class F weights might not meet the 0.1 mg tolerance in this weight range, Class S quality weights are recommended for this audit. (A 1/32-oz [0.89-g] Class F weight has a tolerance of 0.87 mg.)

Class S weights are recommended for the semiannual calibration. At least five weights spanning the operational range of the balance are required. Class S weights from 0.1 mg to approximately 50 g are accurate to within 0.1 mg.

TABLE 1.1. ACTIVITY MATRIX FOR PROCUREMENT OF APPARATUS AND SUPPLIES

Apparatus	Acceptance Limits	Frequency and Method of Measurement	Action if Requirements Are Not Met
Dilution Tunnel (Methods 5G-1, 5G-2, and 5G-3)			
Hood	Steel, large and minimum width 0.3 m	Upon purchase or construction	Replace or return to supplier
90° elbows (at least 2)	Steel, 0.15 to 0.3 m in diameter	Upon purchase	Replace or return to supplier
Straight duct (length as needed)	Steel, 0.15 to 0.3 m in diameter for mixing section; 0.15 for sampling section	Upon purchase	Replace or return to supplier
Mixing baffles (2)	Steel, installed 90° to mixing section duct, 0.3 m apart and on opposite sides	Upon purchase	Replace or return to supplier
Damper	Solid disk recommended, same diameter as duct	Upon purchase	Replace or return to supplier
Blower	Must maintain 4 m^3/min, 14 m^3/min is recommended	Inspect semiannually	Repair or replace
Variac	Capable of controlling blower output 4 m^3/min	Inspect upon purchase	Repair or return to supplier
Wire chimney brush	To fit duct size	Inspect upon purchase	Replace

TABLE 1.1. ACTIVITY MATRIX FOR PROCUREMENT OF APPARATUS AND SUPPLIES (Continued)

Apparatus	Acceptance Limits	Frequency and Method of Measurement	Action if Requirements Are Not Met
Dilution Tunnel Flow Measurement (Methods 5G-1, 5G-2, and 5G-3)			
Pitot tube (Type S or equivalent)	See Figures 1.3 and 1.4 for acceptance limits	Measure dimensions and alignment; identify upon receipt	Do not use if alignment is not within limits; repair or replace
Differential pressure gauge	No leaks; resolution of 0.005 in. H_2O	When purchased, visually inspect and leak check; calibrate non-gauge oil manometers according to Section 2.4.	Adjust or return to supplier
Temperature gauge	Capable of measuring temperature to within 1.5% of minimum absolute stack temperature	Calibrate according to Section 2.2	Return to supplier or repair
Barometer	Capable of measuring atmospheric pressure to within 2.5 mm (0.1 in.) Hg	Check against a mercury-in-glass barometer or equivalent; calibrate according to Section 2.3	Determine correction factor, or reject if difference more than ±2.5 mm (0.1 in.) Hg
Metering System (Methods 5G-1, 5G-2, and 5G-3)			
Dry gas meter (1 required; 2 for Method 5G-3)	Capable of measuring volume to within 1% at a flow rate of 0.02 m^3/min (0.66 ft^3/min)	Check for damage upon receipt and calibrate against wet test meter or an alternate standard according to Section 2.5	Reject if damaged, behaves erratically, or cannot be properly adjusted

TABLE 1.1. ACTIVITY MATRIX FOR PROCUREMENT OF APPARATUS AND SUPPLIES (Continued)

Apparatus	Acceptance Limits	Frequency and Method of Measurement	Action if Requirements Are Not Met
Vacuum pump	Leak free; capable of maintaining a flow rate of 0.02-0.03 m^3/min (0.66 to 1.1 ft^3/min) for pump inlet vacuum of 130 mm (5 in.) Hg	Check upon receipt for leaks, capacity, and erratic performance	Repair or return to supplier
Temperature gauge	Accurate to $\pm$1.5% of the absolute temperature	Check for damage; calibrate against a mercury-in-glass thermometer or as in Section 2.2	Reject if unable to calibrate
Vacuum gauge	0-760-mm (0-30-in.) Hg range, $\pm$25 mm (1 in.) at 130 mm (5 in.) Hg	Check against mercury U-tube manometer upon receipt	Adjust or return to supplier
Orifice (optional)	Pressure restriction downstream of dry gas meter	As described in APTD-0581	Repair or return to supplier
Differential pressure gauge (required if orifice is used)	Resolution of 2.5 mm (0.1 in.) H_2O	When purchased, visually inspect; calibrate against gauge oil manometer	Adjust or return to supplier
Rotameter (optional)	Accurate to within 5% at a flow rate of 0.015 m^3/min (0.5 ft^3/min) (see Section 2.6)	Inspect upon receipt; calibrate against reference dry gas meter	Replace or return to supplier

TABLE 1.1. ACTIVITY MATRIX FOR PROCUREMENT OF APPARATUS AND SUPPLIES (Continued)

Apparatus	Acceptance Limits	Frequency and Method of Measurement	Action if Requirements Are Not Met
Sample Collection System (Method 5G-1)			
Probe	3/8-in. ID, 24 in. long glass or seamless stainless steel (grade 316 or better)	Inspect upon purchase	Repair or return to supplier
Probe cooling system (optional)	Able to cool sample gas to less than 32°C (90°F)	Inspect upon purchase or construction	Repair or replace
Filter holders (3 required)	Leak free; borosilicate glass, stainless steel, or Teflon, capable of handling 100-mm filters	Visually check before use	Return to supplier
Filter temperature monitoring system	Leak free port or thermowell; temperature gauge capable of measuring temperature to within 1.5% of absolute temperature	Upon receipt, visually check for damage; calibrate against mercury-in-glass thermometer or as in Section 2.2	Repair or return to supplier if unable to calibrate
Dryer	Capable of removing water from sample gas to less than 1.5 volume percent, pressure drop not excessive	Upon receipt, visually check for damage; check pressure drop	Repair or return to supplier
Sample Collection System (Method 5G-2)			
Probe	3/8-in. ID, 24 in. long or less, glass or seamless stainless steel (grade 316 or better)	Inspect upon purchase	Repair or return to supplier

TABLE 1.1. ACTIVITY MATRIX FOR PROCUREMENT OF APPARATUS AND SUPPLIES (Continued)

Apparatus	Acceptance Limits	Frequency and Method of Measurement	Action if Requirements Are Not Met
Filter holders (3 required)	Leak free; borosilicate glass, stainless steel, or Teflon; at least 47-mm diameter filters	Inspect upon purchase	Return to supplier
Filter heating system	Capable of heating filter holder to no more than 120°C (248°F); temperature gauge accurate to within 1.5% absolute temperature	Inspect upon purchase	Return to supplier
Impingers (4 required)	Standard stock glass; pressure drop not excessive	Visually check upon receipt; check pressure drop	Return to supplier
Desiccant (4th impinger)	Indicating-type anhydrous calcium sulfate, calcium chloride, or silica gel	Upon receipt, check for grade and certification	Replace or return to supplier
Impinger exit temperatue monitor	Leak free port or thermowell; temperature gauge capable of measuring temperature to within 1.5% of absolute temperature	Upon receipt, visually check for damage; calibrate against mercury-in-glass thermometer or as in Section 2.2	Repair or return to supplier if unable to calibrate
<u>Sample Collection (Method 5G-3)</u>			
Probe (3 required)	1/4-in. ID, 12-in. long glass or seamless stainless steel (grade 316 or better)	Inspect upon purchase	Repair or return to supplier

TABLE 1.1. ACTIVITY MATRIX FOR PROCUREMENT OF APPARATUS AND SUPPLIES (Continued)

Apparatus	Acceptance Limits	Frequency and Method of Measurement	Action if Requirements Are Not Met
Probe cooling system (optional)	Able to cool sample gas to less than 32°C (90°F)	Inspect upon purchase or construction	Repair or replace
Filter holders (5 required)	Leakproof, glass or plastic, at least 47-mm filter size recommended	Visually check upon purchase and before each use	Repair or return to supplier
Filter temperature monitor (2 required)	Accurate to within 1.5% of absolute temperature	Calibrate against mercury-in-glass thermometer upon receipt and semi-annually	Return to supplier if unable to calibrate
Dryer	Capable of removing water from sample gas to less than 1.5 volume percent, pressure drop not excessive	Check upon receipt and before each use	Repair or return to supplier
Sample Recovery and Analysis (Method 5G-1)			
Probe brush	Nylon bristle brush, stainless steel handle, not less than probe length	Inspect upon receipt and before each use	Replace or return to supplier
Wash bottles	Polyethylene or glass; 500 mL	Visually check for damage upon receipt	Replace or return to supplier

TABLE 1.1. ACTIVITY MATRIX FOR PROCUREMENT OF APPARATUS AND SUPPLIES (Continued)

Apparatus	Acceptance Limits	Frequency and Method of Measurement	Action if Requirements Are Not Met
Sample storage containers (3 required)	500 or 1000 mL, borosilicate glass, or polyethylene, leakproof screw caps	Inspect upon receipt and before each use	Replace or return to supplier
Petri dishes (3 required)	Glass or polyethylene, sized to fit 100-mm glass fiber filters	Visually check for damage upon receipt	Replace or return to supplier
Funnel	Glass, suitable for use with sample bottles	Visually check for damage upon receipt	Replace or return to supplier
Glass weighing dishes (3 required)	Borosilicate glass, sized to fit 100-mm fiber filters	Visually check for damage upon receipt	Replace or return to supplier
Beaker	250-mL glass	Visually check for damage upon receipt	Replace or return to supplier
Hygrometer	Humidity gauge capable of reading to within 3% relative humidity	Calibrate upon receipt	Replace or return to supplier
Temperature gauge	Accurate to within 1.5% of absolute temperature	Check against a mercury-in-glass thermometer upon receipt and semi-annually	Replace or return to supplier
Desiccant	Indicating-type anhydrous calcium sulfate or equivalent	Upon receipt, check for grade and certification	Replace or return to supplier

TABLE 1.1. ACTIVITY MATRIX FOR PROCUREMENT OF APPARATUS AND SUPPLIES (Continued)

Apparatus	Acceptance Limits	Frequency and Method of Measurement	Action if Requirements Are Not Met
Filters	Glass fiber without organic binder; 99.95% collection efficiency for 0.3-um dioctyl phthalate smoke particles, at least 47-mm (2 in.) diameter	Manufacturer's guarantee that filters were tested according to ASTM-D2986-715;[5] observe under light for defects	Return to supplier
Acetone	ACS grade; ≤0.001% residue in glass bottles	Upon receipt, verify residue by evaporating a blank sample	Replace or return to supplier
Analytical balance	Capable of measuring to within 0.1 mg	5-point calibration upon receipt and annually, check with Class F weight before each use	Calibrate or return to supplier
Sample Recovery and Analysis (Method 5G-2)			
Probe brush	Nylon bristle brush, stainless steel handle, not less than probe length	Inspect upon receipt and before each use	Replace or return to supplier
Wash bottles	Polyethylene or glass; 500 mL	Visually check for damage upon receipt	Replace or return to supplier
Sample storage containers (5 required)	500 or 1000 mL, borosilicate glass, or polyethylene, leakproof screw caps	Inspect upon receipt and before each use	Replace or return to supplier

TABLE 1.1. ACTIVITY MATRIX FOR PROCUREMENT OF APPARATUS AND SUPPLIES (Continued)

Apparatus	Acceptance Limits	Frequency and Method of Measurement	Action if Requirements Are Not Met
Petri dishes (3 recommended)	Glass or polyethylene, sized to fit 100-mm glass fiber filters	Visually check for damage upon receipt	Replace or return to supplier
Analytical balance	Capable of measuring to ±0.1 mg	Calibrate with five weights upon receipt and annually, check with Class F weight before each use	Return to supplier if unable to calibrate
Triple beam balance (optional)	500-g capacity; capable of measuring to within ±1 g	Check with standard weights upon receipt and before each use	Return to supplier if unable to calibrate
Graduated cylinder (optional)	Glass and Class A; 250 mL with subdivisions ≤2 mL	Upon receipt, check for cracks, breaks, and manufacturer flaws	Replace or return to supplier
Plastic storage container	Airtight, suitable for storage of silica gel	Inspect upon receipt and before each use	Replace or return to supplier
Funnel	Glass suitable for use with sample bottles	Visually check for damage upon receipt	Replace or return to supplier
Rubber policeman	Properly sized	Visually check for damage upon receipt	Replace or return to supplier

TABLE 1.1. ACTIVITY MATRIX FOR PROCUREMENT OF APPARATUS AND SUPPLIES (Continued)

Apparatus	Acceptance Limits	Frequency and Method of Measurement	Action if Requirements Are Not Met
Weighing dishes (3 recommended)	Borosilicate glass, sized to fit filters used	Visually check for damage upon receipt	Replace or return to supplier
Desiccant	Indicating-type anhydrous calcium sulfate, silica gel, or equivalent	Visually check for damage upon receipt	Replace or return to supplier
Beaker	250 mL glass	Visually check for damage upon receipt	Replace or return to supplier
Hygrometer	Humidity gauge capable of reading to within 3% relative humidity	Calibrate upon receipt	Replace or return to supplier
Temperature gauge	Accurate to within 1.5% of absolute temperature	Check against a mercury-in-glass thermometer upon receipt and semi-annually	Replace or return to supplier
Separatory funnel	500 mL or larger, glass or Teflon	Visually check for cracks, stopcock seal	Replace or return to supplier
Filters (3 required)	Glass fiber without organic binder; 99.95% collection efficiency for 0.3-um dioctyl phthalate smoke particles; at least 47-mm diameter	Manufacturer's guarantee that filters were tested according to ASTM-D2986-715;[5] observe under light for defects	Return to supplier

TABLE 1.1. ACTIVITY MATRIX FOR PROCUREMENT OF APPARATUS AND SUPPLIES (Continued)

Apparatus	Acceptance Limits	Frequency and Method of Measurement	Action if Requirements Are Not Met
Silica gel	Indicating type, 6-16 mesh (for fourth impinger)	Upon receipt, check label for grade or certification	Return to supplier
Distilled water	Meets ASTM-D1193-77,[6] Type 3	Check each lot, or specify type when ordering	Replace or return to manufacturer
Stopcock grease	Acetone-insoluble, heat-stable silicone grease	Upon receipt, check label for grade or certification	Replace or return to manufacturer
Acetone	ACS grade; $\leq$0.001% residue in glass bottles	Upon receipt, verify residue for evaporating a blank sample	Replace or return to supplier
Sample Recovery and Analysis (Method 5G-3)			
Probe brush	Nylon bristle brush, stainless steel handle, not less than probe length	Inspect upon receipt and before each use	Replace or return to supplier
Wash bottles (4 recommended) (optional)	Polyethylene or glass; 500 mL	Visually check for damage upon receipt	Replace or return to supplier
Sample storage containers (3 required)	500 or 1000 mL, borosilicate glass or polyethylene, leakproof screw caps	Inspect upon receipt and before use	Replace or return to supplier

TABLE 1.1. ACTIVITY MATRIX FOR PROCUREMENT OF APPARATUS AND SUPPLIES (Continued)

Apparatus	Acceptance Limits	Frequency and Method of Measurement	Action if Requirements Are Not Met
Petri dishes (5 recommended)	Glass or polyethylene, sized to fit 47-mm glass fiber filters	Visually check for damage upon receipt	Replace or return to supplier
Glass weighing dishes (5 recommended)	Borosilicate glass, sized to fit fiber filters at least 47-mm diameter	Visually check for damage upon receipt	Replace or return to supplier
Hygrometer	Humidity gauge capable of reading to within 3% relative humidity	Calibrate upon receipt	Replace or return to supplier
Temperature gauge	Accurate to within 1.5% of absolute temperature	Check against a mercury-in-glass thermometer upon receipt and semi-annually	Replace or return to supplier
Desiccant	Indicating type anhydrous calcium sulfate, silica gel, or equivalent	Upon receipt, check for grade and certification	Replace or return to supplier
Filters (5 required)	Glass fiber without organic binder; 99.95% collection efficiency for 0.3-um dioctyl phthalate smoke particles, at least 47-mm (2-in.) diameter	Manufacturer's guarantee that filters were tested according to ASTM-D2986-71;[5] observe under light for defects	Return to supplier
Acetone (optional)	ACS grade; $\leq$0.001% residue in glass bottles	Upon receipt, verify residue by evaporating a blank sample	Replace or return to supplier

TABLE 1.1. ACTIVITY MATRIX FOR PROCUREMENT OF APPARATUS AND SUPPLIES (Continued)

Apparatus	Acceptance Limits	Frequency and Method of Measurement	Action if Requirements Are Not Met
Analytical balance	Capable of measuring to within 0.1 mg	5-point calibration upon receipt and semiannually, check with Class F weight before each use	Calibrate or return to supplier
<u>Calibration</u>			
Wet test meter (optional)	Accurate to within 1%	Calibrate annually	Return to supplier if unable to calibrate
Reference dry gas meter	Calibration factor of 1.0 ± 0.01	Calibration upon receipt and semi-annually	Return to supplier if unable to calibrate
Pitot tube calibration assembly (optional)	Suitable for determining coefficient of Pitot tubes	Inspect upon receipt and before each use	Repair or return to supplier
Reference thermometer	Mercury-in-glass or ASTM-certified reference thermometer	Inspect upon receipt and before each use	Repair or return to supplier
Reference barometer	Mercury-in-glass barometer	Inspect upon receipt and before each use	Repair or return to supplier
Reference manometer	Gauge-oil manometer resolution of 0.005 in. H_2O	Inspect upon receipt and before each use	Repair or return to supplier

TABLE 1.1. ACTIVITY MATRIX FOR PROCUREMENT OF APPARATUS AND SUPPLIES (Continued)

Apparatus	Acceptance Limits	Frequency and Method of Measurement	Action if Requirements Are Not Met
Analytical balance calibration weights	5 weights in range of balance accurate to 0.1 mg; Class S weights are acceptable	Manufacturer's certification of tolerance is acceptable	Return to supplier
Analytical balance check weight	Class F weight, 50-150% of dry filter, is acceptable; Class S weight is recommended	Manufacturer's certification is acceptable	Return to supplier

2.0 CALIBRATION OF APPARATUS

Calibration of apparatus is one of the most important functions in maintaining data quality. The detailed calibration procedures in this section are designed for the equipment specified by Method 5G and described in the previous section. Method 28 will contain additional equipment to be calibrated in order to perform a wood heater test. A laboratory log book of all calibrations must be maintained. The equipment discussed in this section are:

- Section 2.1 - Pitot Tubes,
- Section 2.2 - Temperature Sensors,
- Section 2.3 - Barometers,
- Section 2.4 - Differential Pressure Gauges,
- Section 2.5 - Metering System,
- Section 2.6 - Rotameters, and
- Section 2.7 - Analytical Balance.

Several of these sections contain information for more than one piece of equipment as alternatives to a calibration procedure.

Table 2.1 at the end of this section summarizes the quality assurance activities for calibration.

2.1 Pitot Tube

2.1.1 Type S Pitot Tube - A Type S Pitot tube should be calibrated by using a wind tunnel (see subsection 2.1.1.2) and measured and checked to determine compliance with the prescribed dimensions. The following subsection describes the dimensions to measure.

2.1.1.1 Measurement Check - A Type S Pitot tube shown in Figure 2.1 is required. The Pitot tube should be constructed of metal tubing (e.g., 304 or 316 stainless steel) with an external tubing diameter (D_t) between 0.48

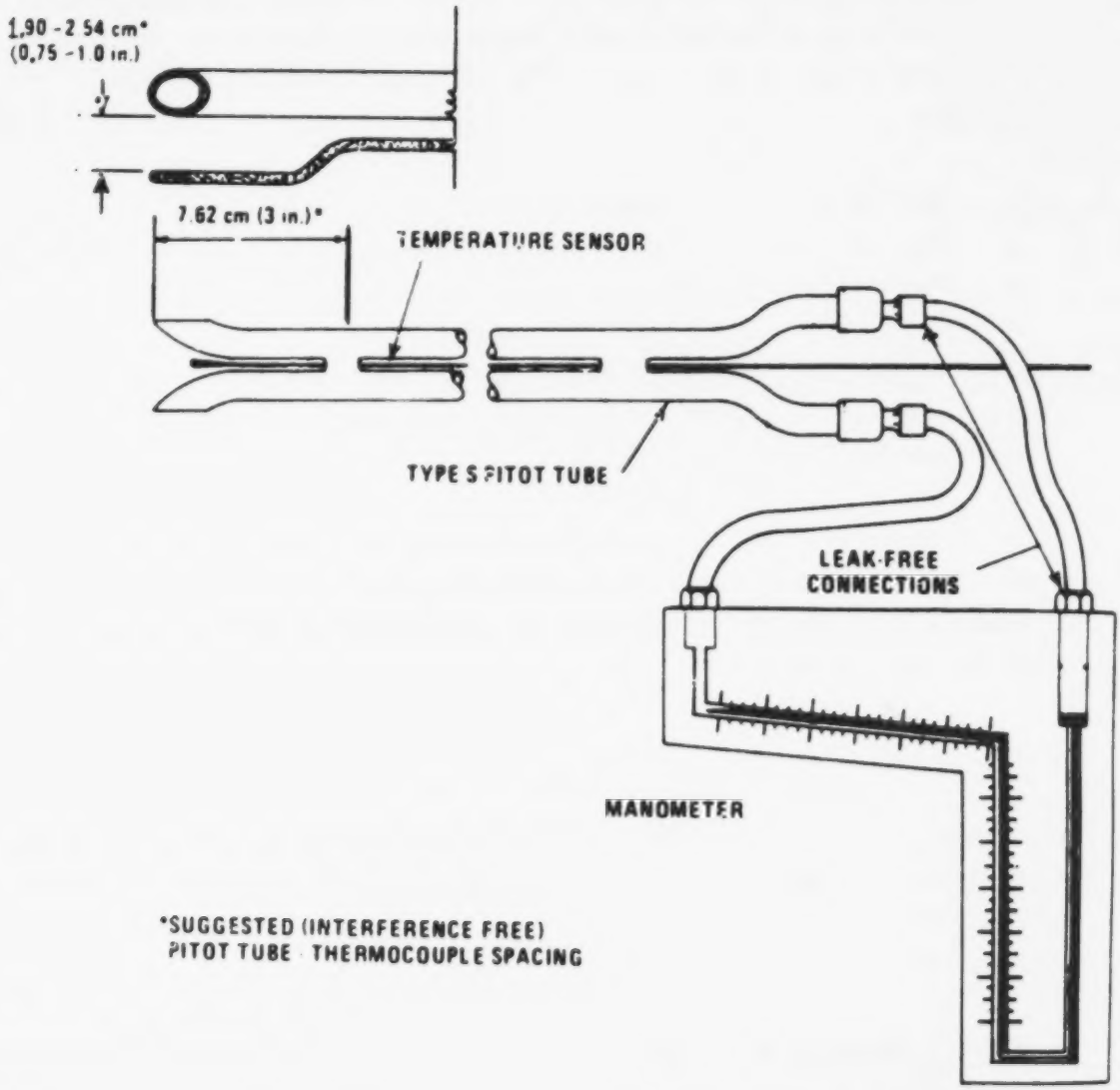

Figure 2.1. Type S Pitot Tube-Manometer Assembly

and 0.95 cm (3/16 and 3/8 in.). The major criteria in Pitot tube construction material are durability and corrosion resistance. Upon receiving a new Pitot tube, inspect it to determine if it was constructed according to the configuration in Figure 2.2. Repair, replace, or return to the manufacturer any Type S Pitot tube which does not meet the face opening specifications outlined in Figure 2.3. One method of inspecting the construction details is as follows:

1. Obtain a section of angle aluminum approximately 20 cm (8 in.) long by 1.3 x 2.5 cm (0.5 x 1.0 in.). Mount at bull's eye level (with $\pm 1^{\circ}$ accuracy) to the angle aluminum, as shown in Figure 2.4.
2. Place the Pitot tube in the angle aluminum as shown in Figure 2.4 and level the Pitot tube as indicated by the bull's eye level. A vise may be used to hold the angle aluminum and Pitot tube. Note: A permanently mounted Pitot tube and probe assembly may require a shorter section of angle aluminum to allow proper mounting on the assembly.
3. Place a degree-indicating level in the various positions, as illustrated in Figure 2.5.
4. Measure distances P_a and P_b.
5. Measure the external tube diameter (D_t) with a micrometer. Record all data on a data sheet such as that shown in Figure 2.6.
6. Calculate dimensions w and z by using the following equations:

$$z = A \sin \gamma \qquad \text{Eq. 2.1}$$
$$w = A \sin \theta \qquad \text{Eq. 2.2}$$

where:

z = alignment dimension, cm (in.);
w = alignment dimension, cm (in.);
A = distance between tips, ($P_a + P_b$), cm (in.);
γ = angle in degrees; and
θ = angle in degrees (as described in Figure 2.3).

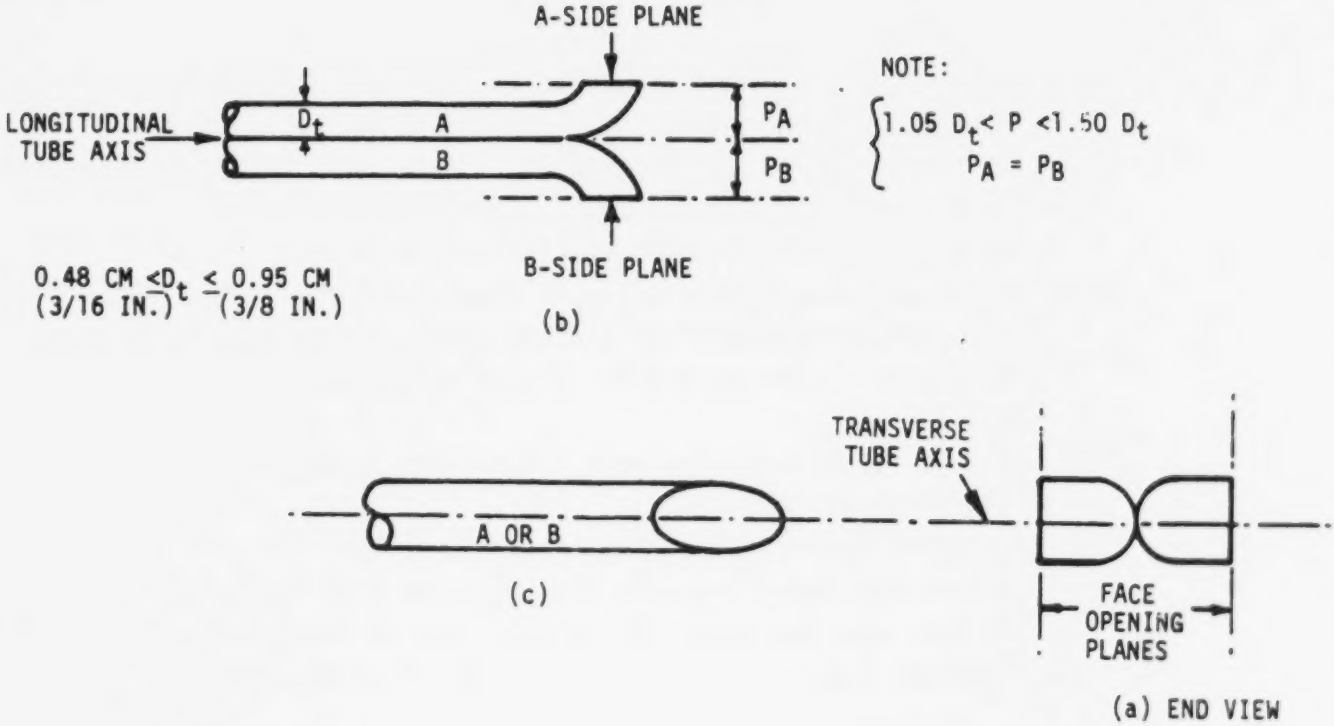

Figure 2.2. Properly Constructed Type S Pitot Tube. Shown in: (a) end view, face opening planes perpendicular to transverse axis; (b) top view, face opening planes parallel to longitudinal axis; (c) side view, both legs of equal length and centerlines coincident when viewed from both sides. Baseline coefficient values of 0.84 may be assigned to pitot tubes constructed this way.

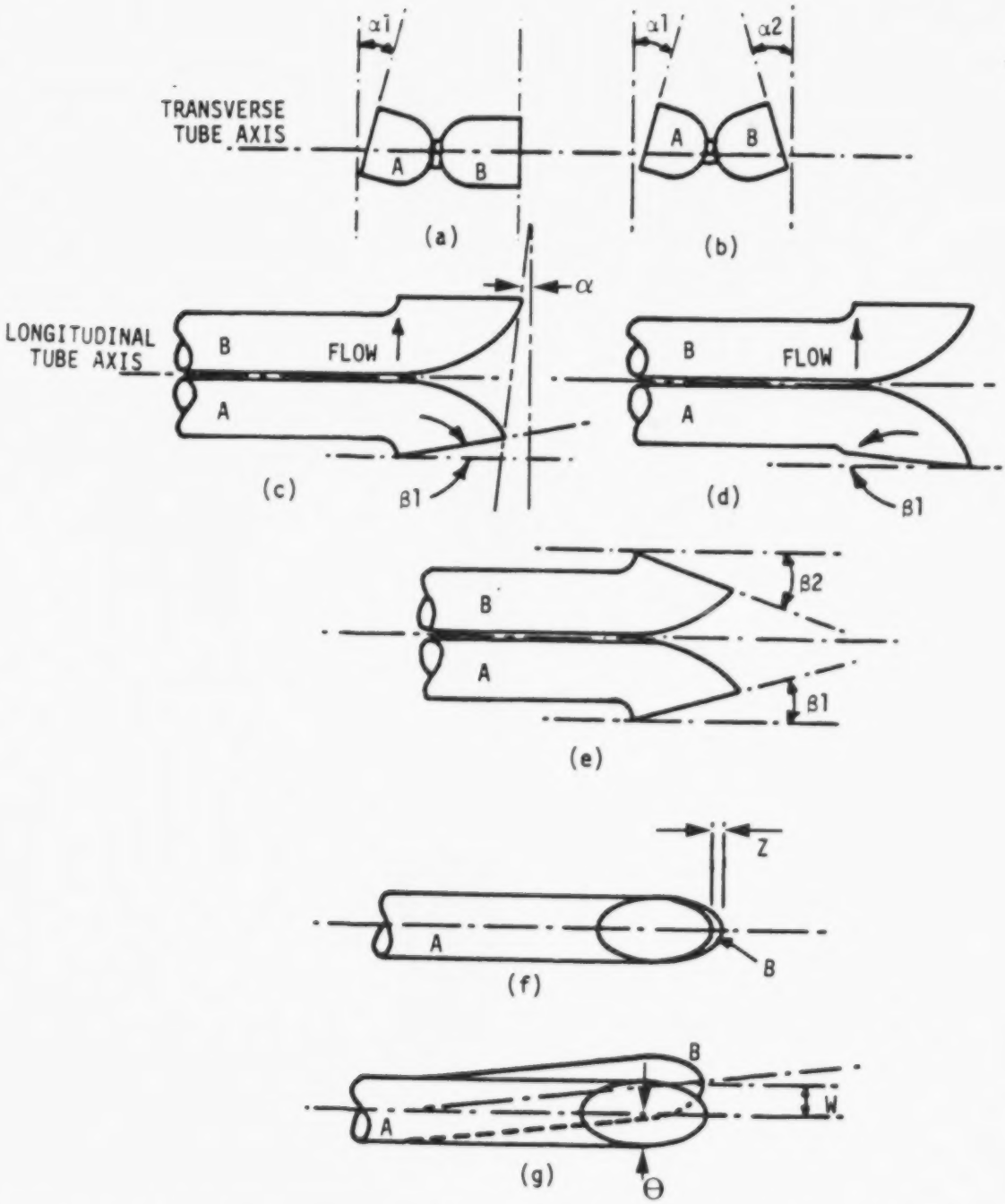

Figure 2.3. Types of face-opening misalignment that can result from field use or improper construction of Type S pitot tubes. These will not affect Cp so long as $\alpha 1$ and $\alpha 2 < 10^{\circ}$, $\beta 1$ and $\beta 2 < 5^{\circ}$, z <0.32 cm (1/8 in.) and w<0.08 cm (1/32 in.).

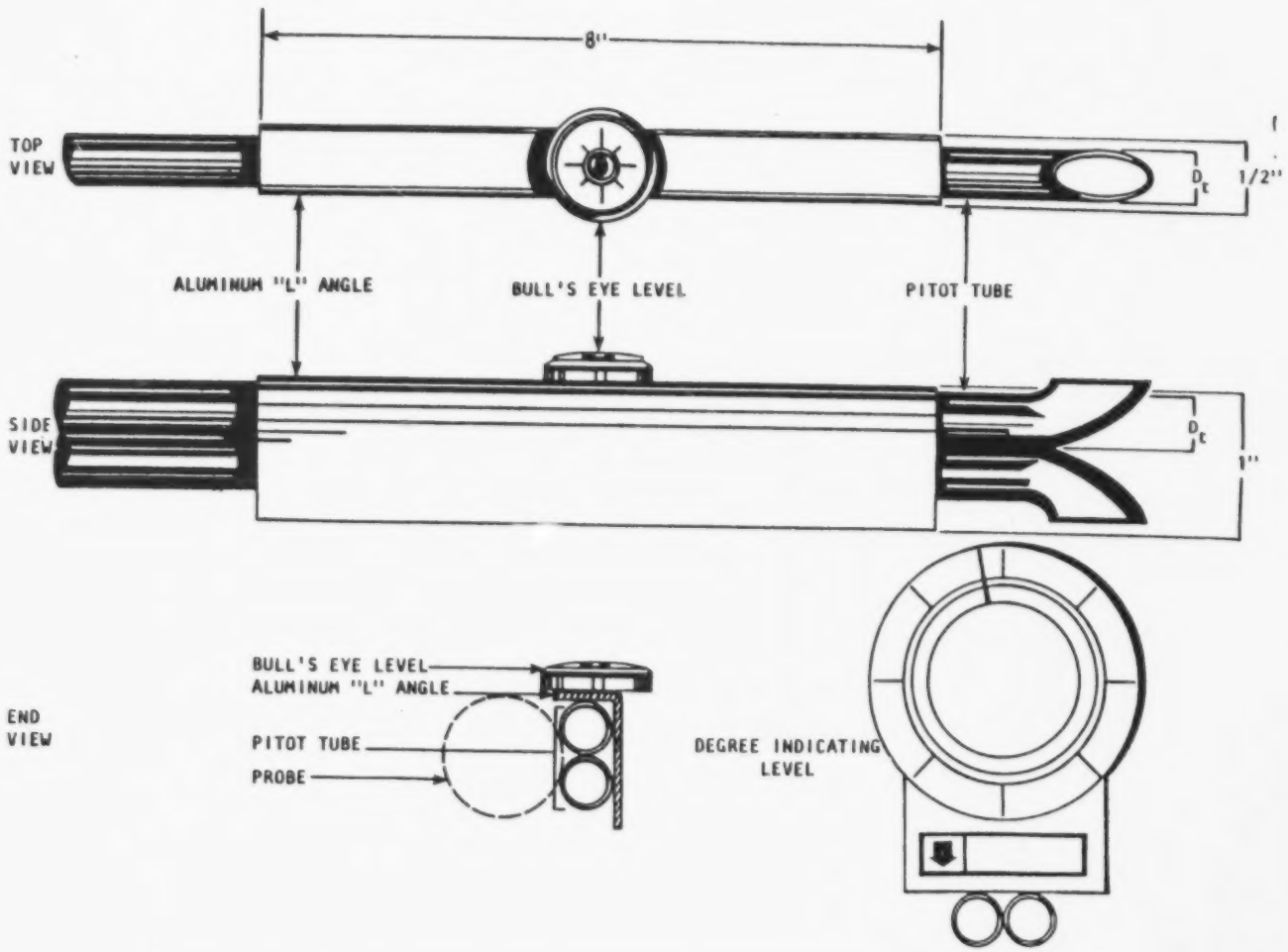

Figure 2.4. Type-S Pitot Tube Dimension Specialization Measurements

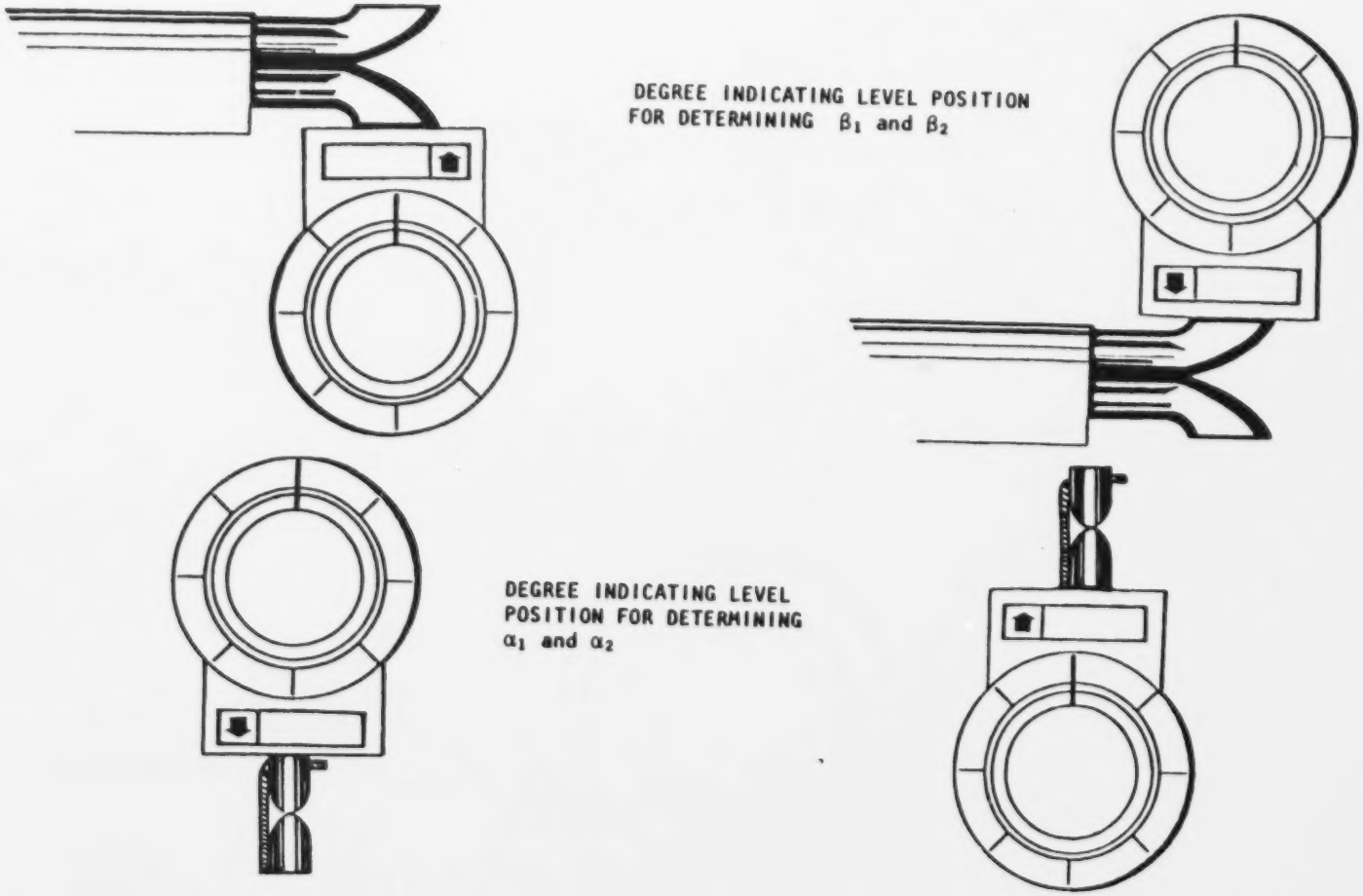

Figure 2.5. Position of Dimension Measurement

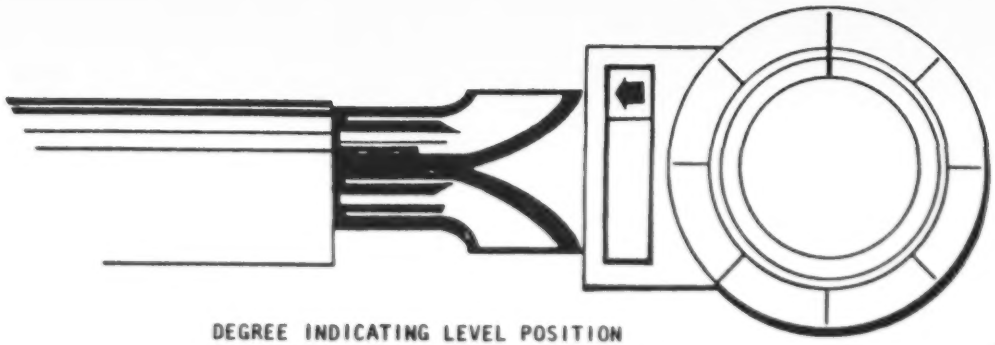

DEGREE INDICATING LEVEL POSITION
FOR DETERMINING γ, THEN CALCULATING Z

DEGREE INDICATING LEVEL
POSITION FOR DETERMINING
θ, THEN CALCULATING W

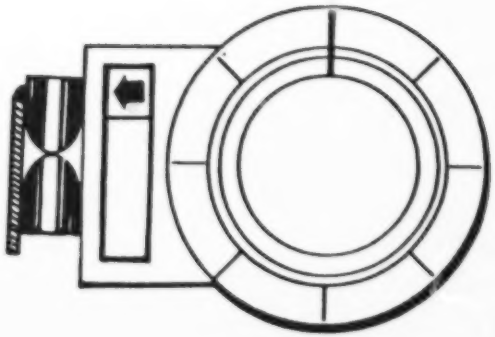

Figure 2.5. Position of Dimension Measurement (Continued)

Pitot tube assembly level ? yes ☑ no ☐

Pitot tube openings damaged ? yes (explain below) ☐ no ☐

α_1 = 5 °(<10°), α_2 = 0 °(<10°), β_1 = 0 °(<5°), β_2 = 0 °(<5°)

γ = 0 °, θ = 0 °, A = N/A cm (inches)

z = A sin γ = 0 cm (inches); <0.32 cm (<1/8 inches),

w = A sin θ = 0 cm (inches); <0.08 cm (<1/32 inches),

P_A 1/4 in. cm (inches), P_b 1/4 in. cm (inches), D_t = 3/16 in. cm (inches)

Comments: Dt x 1.5 = .281 in. > .25 in.

Calibration required ? yes ☐ no ☑

Figure 2.6. Type-S Pitot Tube Inspection Data Sheet

Note: Pitot tubes with bent or damaged tubing may be difficult to check by using this procedure. If the Type-S Pitot tube meets the face alignment criteria, an identification number should be assigned and permanently marked or engraved on the body of the tube.

2.1.1.2 Calibration Setup - A test setup for calibrating the Pitot tube can be constructed in the laboratory from a straight section of duct that is 10 to 12 duct diameters long, as shown in Figure 2.7. The diameter of a circular duct must be at least 15.2 cm (6 in.).

To ensure stable, fully developed flow patterns at the calibration site or at the "test section," this site must be located at least 8 diameters downstream and 2 diameters upstream from any flow disturbance such as a bend, change in cross section, orifice, fan, or opening.

The 8- and 2-diameter criteria are not absolute, and other test section locations may be used (subject to approval of the Administrator), provided that the flow at the test site is stable and parallel to the duct axis. This may be achieved by using flow straighteners.

An orifice plate is installed at least 2 diameters from the exit of the blower and at least 8 diameters upstream of the test site. The orifice plate is a piece of steel, plastic, or other rigid material which is at least 6 mm (1/4 in.) thick and has a 50.8 $\pm$ 0.2 mm (2.00 $\pm$ 0.01 in.) hole drilled into the center of the plate. The orifice plate is fixed to the ducting in such a way as to prevent leaks or bypass flow in any area other than the orifice hole. Two pressure taps are connected on either side of the orifice plate. The pressure tap on the blower side of the plate is 76 mm (3 in.) from the plate, and the tap on the sampling side is 25.4 mm (1 in.) from the plate. These taps are connected to a pressure gauge which will measure 0-20 in. H_2O with a resolution of 0.1 in. H_2O and an accuracy of $\pm$0.1 in. H_2O.

Alternatively, this plate may be mounted directly into the dilution tunnel for this calibration. Space must be provided in the dilution tunnel for mounting the plate for the post-test check.

The flow system should generate a test section velocity greater than 220 m/min (720 ft/min). This velocity must be constant with time to guarantee steady flow during calibration. Type-S Pitot tube coefficients

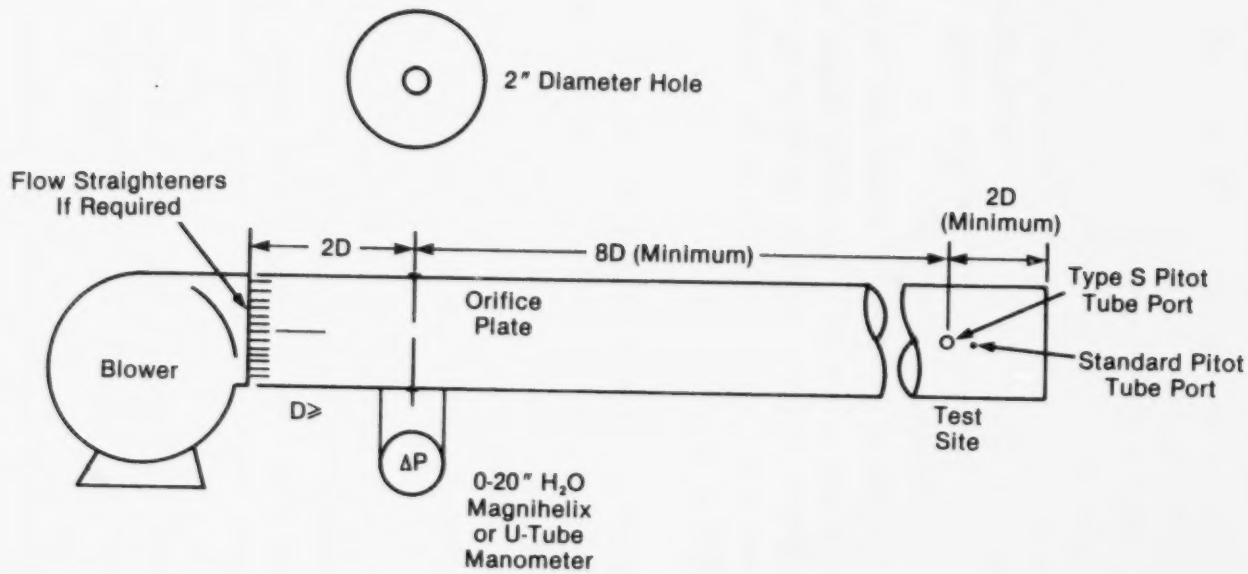

Figure 2.7. Pitot Tube Calibration System

obtained by single-velocity calibration at 220 m/min (720 ft/min) will generally be valid to within ±6% for the measurement of velocities.

Two entry ports (one each for the standard and for the Type-S Pitot tubes) should be cut in the test section, as shown in Figure 2.8. The standard Pitot entry port should be slightly downstream of the Type-S Pitot port, so that the standard and Type S impact openings will lie in the same cross sectional plane during calibration. The exact distance between openings depends on the standard Pitot tube diameter. To facilitate alignment of the Pitot tubes during calibration, the test section should be constructed of plastic or some transparent material.

A permanently mounted manometer should be provided near the calibration site. Plastic tubing and two-way valves will facilitate connecting the manometer to the Pitot tubes and in switching from one Pitot tube to another. Pitot tube holders should be used to maintain the alignment and location of each Pitot tube during calibration.

2.1.2 Standard Pitot Tube - A standard pitot tube (Figure 2.9) may be used instead of a Type S for conducting velocity traverses. Upon receiving a new standard Pitot tube, inspect it to determine if it meets the following design criteria. Repair, replace, or return to the manufacturer any standard Pitot tube which does not meet these criteria.

1. The tip is of the hemispherical (shown in Figure 2.9), ellipsoidal, or conical design.
2. There is a minimum of 6 diameters straight run (based upon D, the external diameter of the tube) between the tip and static pressure holes.
3. There is a minimum of 8 diameters straight run between the static pressure holes and the centerline of the external tube, following the 90° bend.
4. The static pressure holes are of equal size (approximately 0.1 D), equally spaced in a piezometer ring configuration.
5. It has a 90° bend, with curved or mitered junction.

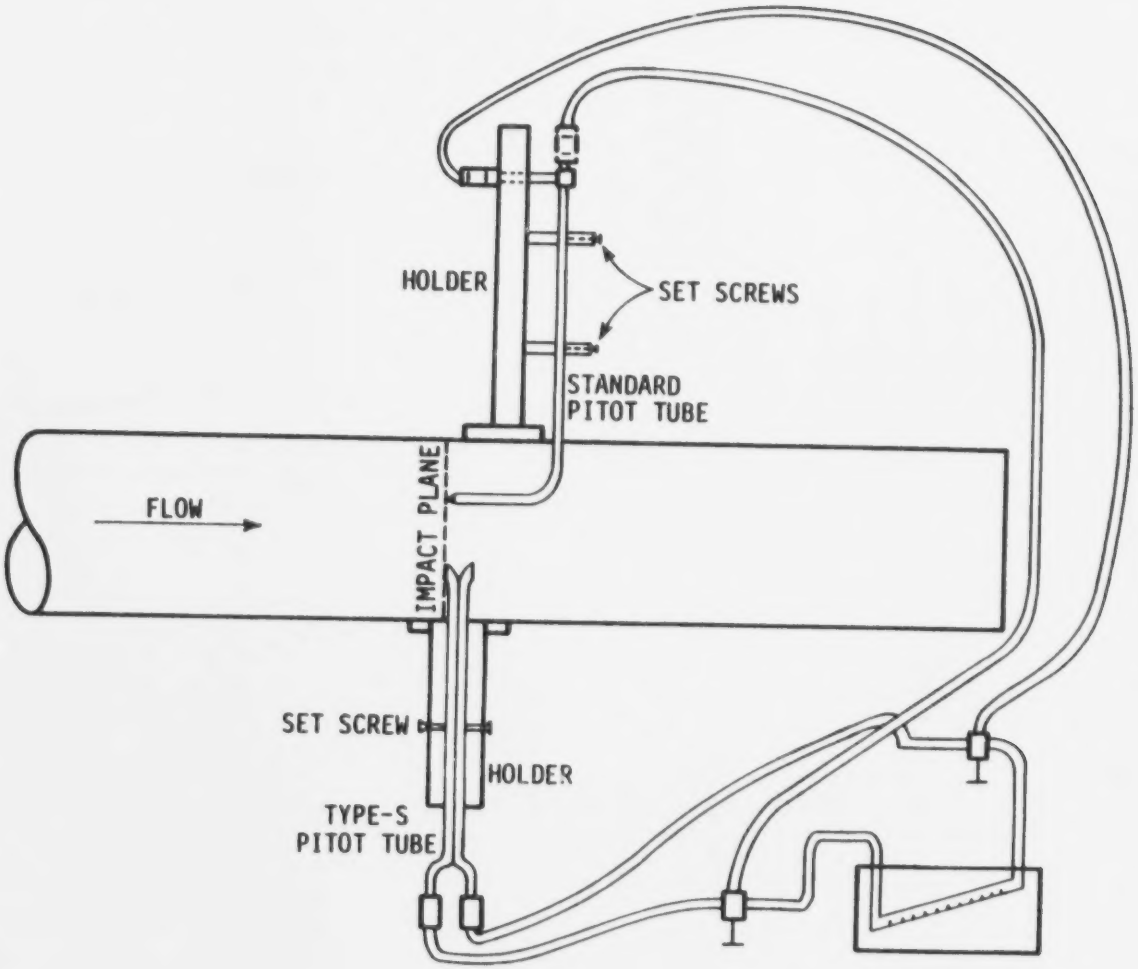

Figure 2.8. Pitot Tube Calibration Setup

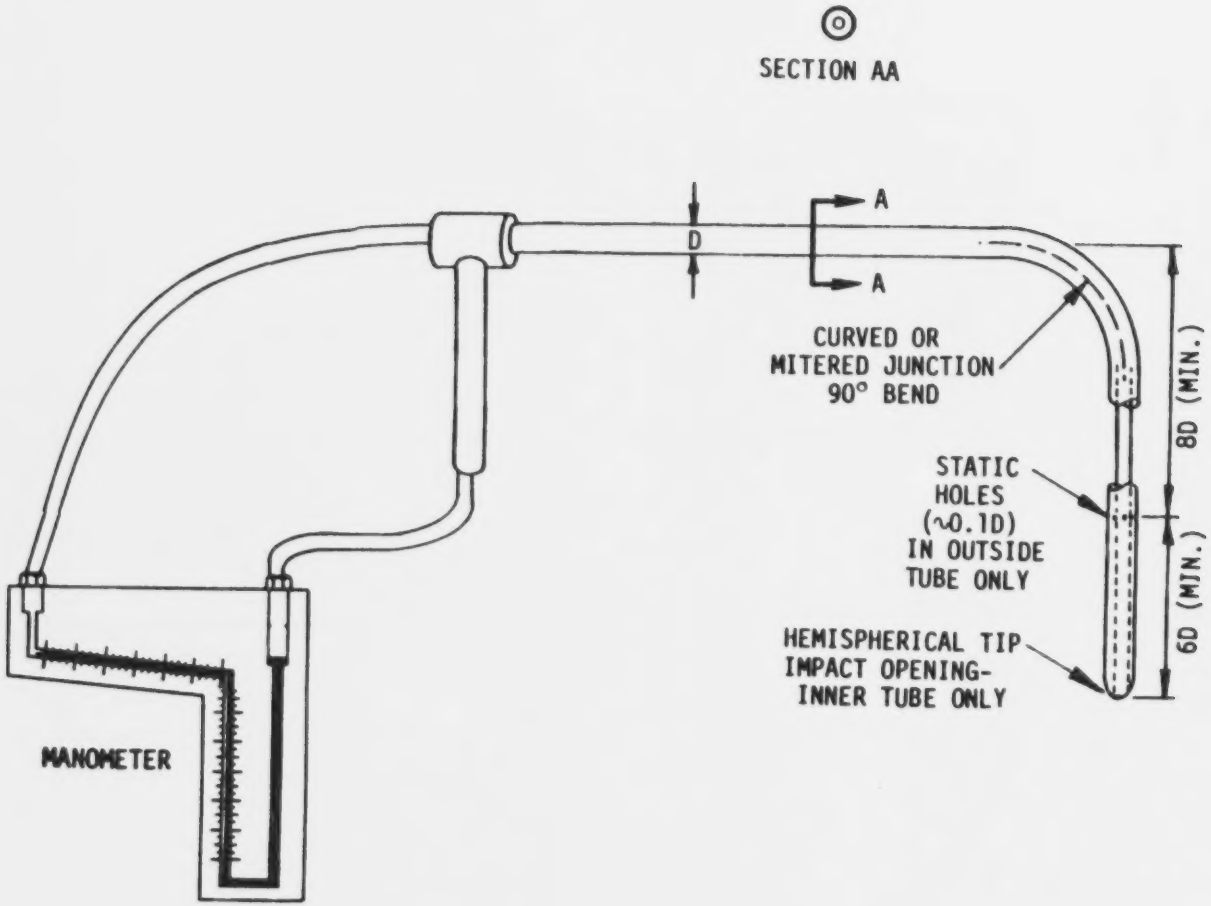

Figure 2.9. Standard Pitot Tube Design Specifications

2.1.3 Calibration Procedure - One leg of the Type-S Pitot tube should be marked with an "A" and the other with a "B." To obtain calibration data for both the A and B sides, proceed as follows.

1. Clean and fill the manometer with clean fluid of the proper density. Inspect and leak check all Pitot lines and fittings; repair or replace if necessary.
2. Assemble the apparatus, as shown in Figures 2.7 and 2.8.
3. Level and zero the inclined manometer. Turn on the fan and allow the flow to stabilize. Seal the Type-S entry port with duct tape.
4. Position the standard-type Pitot tube near the center of the duct and seal the entry port with duct tape or other means. Check to be sure that the Pitot tube is properly aligned and perpendicular to the duct.
5. Adjust the fan speed or intake area to give a desired velocity head, as measured by the Δp gauge on the orifice. Set the Δp to read 7.0 in. $H_2O \pm 0.1$ in. H_2O on the gauge. Allow this reading to stabilize prior to taking readings with the Pitot tube. Note: This assumes standard temperature of 68^oF. If the ambient temperature (or dilution tunnel temperature) is greater than 1.5% different, correct the volume accordingly. Record Δp_{std} on a sheet such as that shown in Figure 2.10. Check the reading again, withdraw this Pitot tube, and seal the opening.
6. Connect the Type-S Pitot tube to the manometer. Insert the Type-S tube and locate the tip at the same point in the duct as that measured by the standard tube.
7. Align the Type-S tube with leg A facing directly upstream. Alignment of the Pitot tube along the roll and pitch axes is best accomplished by visually aligning it against the duct. Seal the entry port with a rag or duct tape. Figures 2.11 and 2.12 illustrate the magnitude and characteristics of measurement errors in C_p associated with varying degrees of nonalignment on the roll (yaw) and pitch axes, respectively.

Calibration Pitot Tube: type S size (OD) 3/16 in. ID number F-1

Type S Pitot Tube ID Number 18 $C_{p(std)}$ = 0.99

Calibration: date 12/10/87 performed by GDR

A - Side Calibration			
$\Delta p_{std}'$ cm (in.) H_2O	$\Delta p_s'$ cm (in.) H_2O	$C_{p(s)}$[a]	DEV.[b]
0.035	0.050	0.828	0.011
0.045	0.060	0.857	0.018
0.060	0.085	0.832	0.007
	Average	0.839	

B - Side Calibration			
$\Delta p_{std}'$ cm (in.) H_2O	$\Delta p_s'$ cm (in.) H_2O	$C_{p(s)}$[a]	DEV.[b]
0.040	0.055	0.844	0.005
0.050	0.070	0.837	0.012
0.065	0.085	0.866	0.017
	Average	0.849	

[a] $C_{p(s)} = C_{p(std)}\sqrt{\frac{\Delta p_{std}}{\Delta p_s}}$ = _____

[b] DEV = $C_{p(S)} - C_p$, (must be <0.01)

$C_p(A) - C_p(B)$ = 0.01 (must be <0.01)

Figure 2.10. Pitot Tube Calibration Data

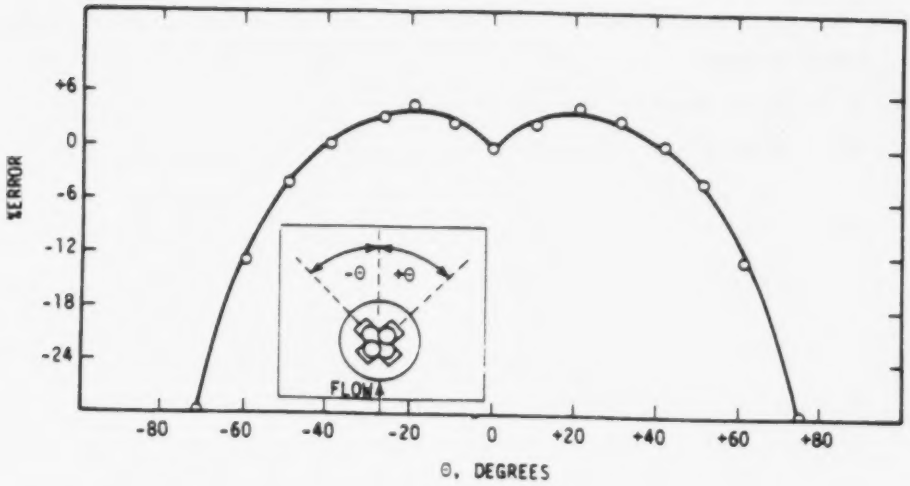

Figure 2.11. Example of error in measured stack gas velocity as a function of tube misalignment along its roll axis (yaw).

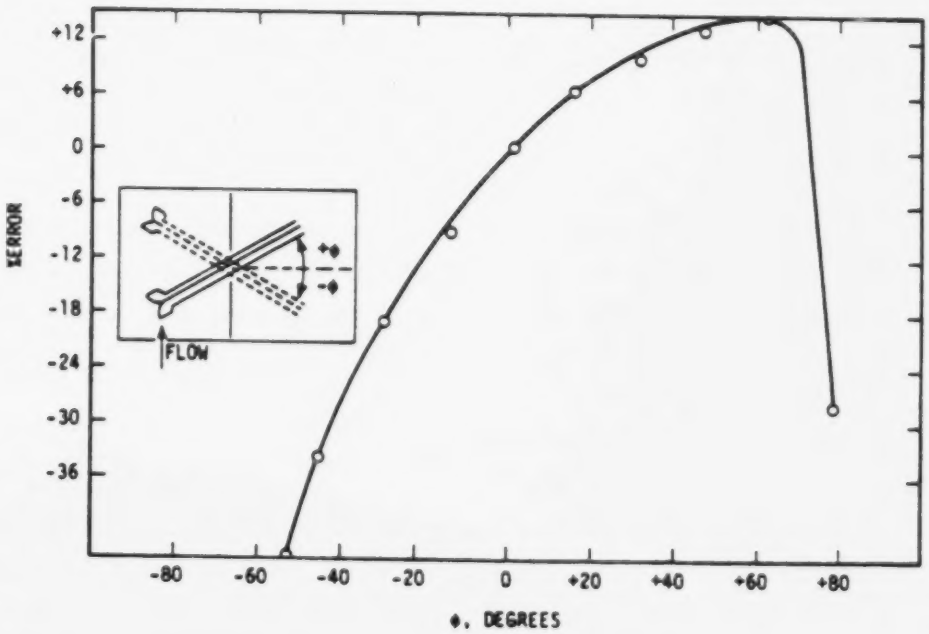

Figure 2.12. Example of error in measured stack gas velocity as a function of tube misalignment along its pitch axis.

8. Read and record the velocity head, Δp_s in Figure 2.10. Remove the Type S tube from the duct and disconnect the manometer.
9. Repeat steps 4 through 8 above until three sets of velocity head measurements are obtained.
10. Repeat the complete procedure with leg B of the Type-S Pitot tube facing upstream.
11. Calculate the Type-S Pitot tube coefficient, $C_{p(S)}$, for each set of measurements, by using Equation 2.3.

$$C_{p(S)} = C_{p(std)} \sqrt{\frac{\Delta p_{std}}{\Delta p_s}} \qquad \text{Eq. 2.3}$$

where:

$C_{p(S)}$ = Type-S Pitot tube coefficient;

$C_{p(std)}$ = standard Pitot tube coefficient (use 0.99 if coefficient is unknown and tube is designed according to guidelines in Method 2.

Δp_{std} = velocity head measured by the standard pitot tube, cm (in.) H_2O;
and

Δp_s = velocity head measured by the Type-S Pitot tube, cm (in.) H_2O.

12. Calculate $\bar{C}_p(A)$ and $\bar{C}_p(B)$, the average A-side and B-side coefficients, and the difference between these two averages.
13. Calculate the deviation of each of the three A-side values of $C_{p(S)}$ from $\bar{C}_p(A)$, and the deviation of each B-side value of $C_{p(S)}$ from $\bar{C}_p(B)$ by using Equation 2.4.

$$\text{Deviation} = C_{p(S)} - \bar{C}_p \text{ (A or B)} \qquad \text{Eq. 2.4}$$

14. Calculate the estimated standard deviation of the deviations from the mean for both the A and B sides of the Pitot tube by using Equation 2.5.

$$s\ (A \text{ or } B) = \left(\frac{\sum_{1}^{3} [C_{p(S)} - \bar{C}_p\ (A \text{ or } B)]^2}{3} \right)^{1/2} \qquad \text{Eq. 2.5}$$

Use the Type-S Pitot tube assembly only if the values of s for both A and B are ≤ 0.02 and if the absolute value of the difference between $\bar{C}_p(A)$ and $\bar{C}_p(B)$ is ≤ 0.01.

2.1.4 Recalibration - After each certification test, the isolated Pitot tubes must be carefully examined and their dimensions checked. If damaged, a tube must either be repaired to conform with the acceptable dimensions or be discarded. Pitot tube assembly dimensions must also be carefully checked. If the component spacings have not changed and if alignment is intact, the assembly may be reused with the same correction factor. If the spacings have changed, either restore the original spacing or recalibrate. No correction to the field data is required for runs that were started with acceptable Pitot tubes. If the Pitot tube is damaged, it may be replaced by using an interference-free spacing, as shown in Section 2.1. Otherwise, the assembly should be recalibrated. Pitot tubes should also be checked for plugging after each test series. Tar and creosote buildup should be removed with acetone if the probe inlet area is obstructed.

Standard Pitot tubes need not be recalibrated. If they are damaged, they should be replaced.

2.2 Temperature Sensors

The temperature sensors should be calibrated upon receipt or checked before field use. Each sensor should be uniquely marked for identification. The calibration should be performed at two points and then extrapolated over the range of temperatures anticipated during actual sampling. For the two-point calibration, a reference mercury-in-glass thermometer should be used.

The following procedure is recommended for calibrating temperature sensors (thermocouples and thermometers) for field use.

1. For the ice point calibration, form a slush from crushed ice and liquid water (preferably deionized distilled) in an insulated vessel such as a Dewar flask.

   Taking care that it does not touch the sides of the flask, insert the stack temperature sensor into the slush to a depth of at least 2 in. Wait 1 min to achieve thermal equilibrium and record the readout on the potentiometer. Obtain three readings taken in 1-min intervals. Note: Longer times may be required to attain thermal equilibrium with thick-sheathed thermocouples.

2. Fill a large Pyrex beaker with water to a depth $\geq$4 in. Place several boiling chips in the water and bring the water to a full boil by using a hot plate as the heat source. Insert the stack temperature sensor(s) in the boiling water to a depth of at least 2 in., taking care not to touch the sides or bottom of the beaker.

   Alongside the sensor(s), an ASTM reference thermometer should be placed. If the entire length of the mercury shaft in the thermometer cannot be immersed, a temperature correction will be required to give the correct reference temperature.

   After 3 min, both instruments will attain thermal equilibrium. Simultaneously record temperatures from the ASTM reference thermometer and the stack temperature sensor three times at 1-min intervals. Record data on Figure 2.13.

3. The data may be extrapolated above and below the calibration points and cover the entire manufacturer's suggested range for the thermocouple. For the portion of the plot or equation that agrees to within 1.5% of the absolute reference temperature, no correction need be made. For all other portions that do not agree within 1.5%, use a plot or equation to correct the data.

   If the absolute temperature values of the reference thermometer and stack temperature sensor (other than the thermocouple) agree to within 1.5% at each of the two points, the thermometer may be used over the range of calibration points for testing without applying any correction factor. The data cannot be extrapolated outside the calibration points.

Temperature Monitor Type Thermocouple
Identification Number TC #1

Reference Temperature Monitor Type ASTM mercury-in-glass
Identification Number ASTM #2

Readout Device TC Meter

Test Facility Trutest
Calibration Performed By MWH
Date 9-10-87

Ambient Temperature 72° F
Barometric Pressure 29.95 in. Hg

Reference Point Source [1]	Temperature of Reference Point [2]	Observed Temperature		Difference in Percent of Absolute Temperature [3]	Action Taken [1]
		A Reference Temperature Monitor	B Temperature Monitor		
ice-bath	32° F	32° F	35° F	0.6%	
boiling water	212° F	212°F	216° F	0.6%	

[1] Reference Points include ice-bath, boiling water, furnace, etc.

[2] Boiling Point H_2O in °C = 100 – .94 (29.92 – Barometric Pressure in in. Hg)
Boiling Point H_2O in °F = 212 – 1.69 (29.92 – Barometric Pressure in in. Hg)

[3] Difference in Percent Absolute = $\left(\frac{A - B}{A + 273}\right) \times 100$ for A and B in °C; $\left(\frac{A - B}{A + 460}\right) \times 100$, for A and B in °F

Figure 2.13. Temperature Monitor Calibration Sheet

2.3 Barometer

The barometer should be adjusted initially and semiannually thereafter to agree to within 2.5 mm (0.1 in.) Hg of the mercury-in-glass barometer or the station pressure value reported by the nearest National Weather Service station corrected for elevation. The correction for elevation difference between the weather station and sampling point should be applied at a rate of -2.5 mm (0.1 in.) Hg per 30 m (100 ft) of excess elevation. Record the results on the pretest sampling check sheet or on a similar sheet.

2.4 Differential Pressure Gauge

Differential pressure gauges other than inclined manometers must be calibrated initially, and their calibration must be checked at six-month intervals. Calibrate and check the differential pressure gauge by using the following procedure.

1. Connect the differential pressure gauge to a gauge-oil manometer, as illustrated in Figure 2.14.
2. Vent the vacuum side to the atmosphere and place a pressure on each system.
3. Compare Δp readings of the differential pressure gauge with those of the gauge-oil manometer at a minimum of three points representing approximately the range of Δp values to be encountered. Follow the same procedures on the vacuum side by venting the pressure side to the atmosphere and by putting a vacuum on the system.
4. The post-test calibration should be performed at the average Δp. If the agreement is within 5%, the calibration is acceptable. If not, void the data, recalibrate, or consult the Administrator to determine acceptability.
5. Record the data on a sheet such as Figure 2.15. If, at each point, the value of Δp as read by the differential pressure gauge and the gauge-oil manometer agree to within 5%, the differential pressure gauge should be considered properly calibrated.

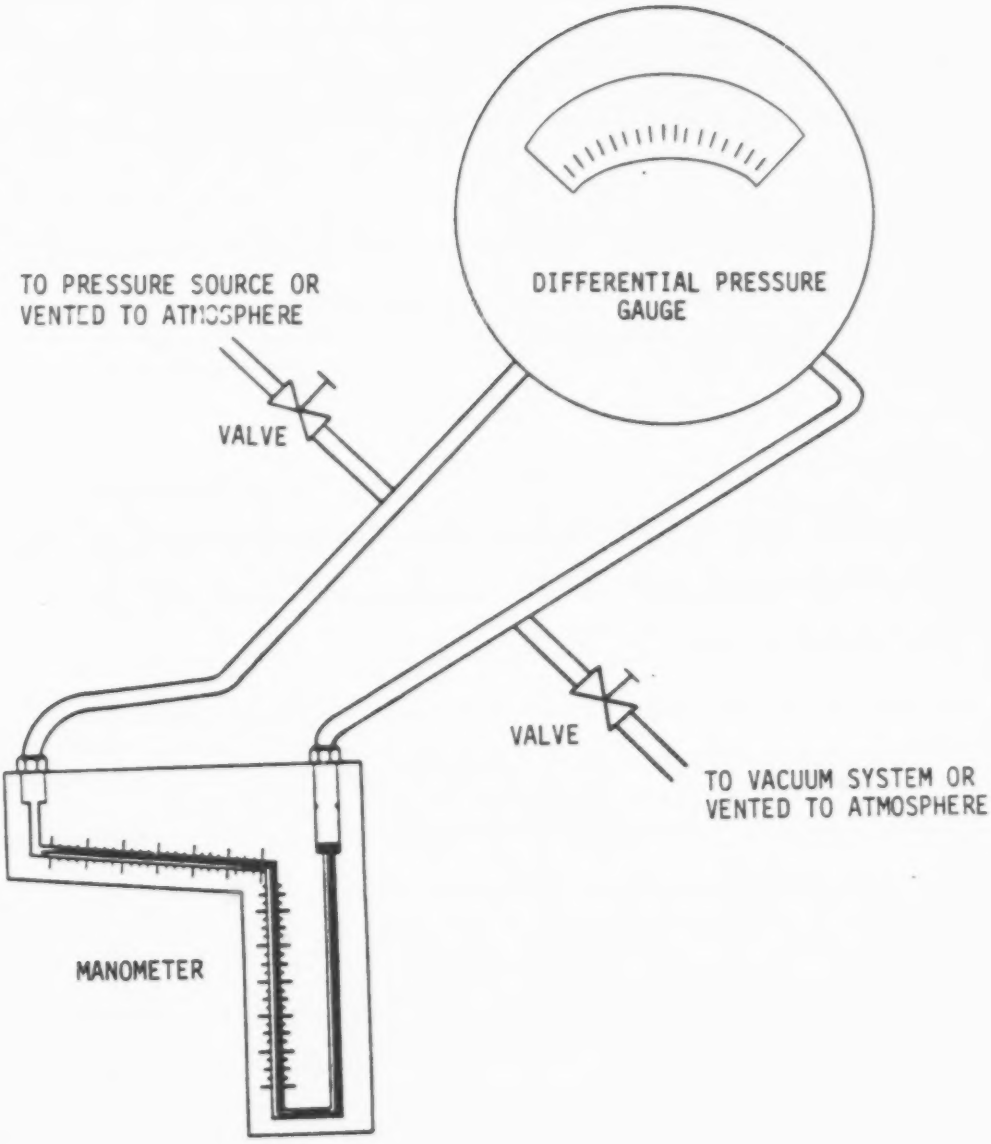

Figure 2.14. Differential Pressure Gauge Check

Gauge Type Magnehelic Serial or ID Number R-034 Range 0-1" H_2O

Resolution 0.005 in. H_2O Calibration X Initial _____ Posttest

Date Calibrated 10/17/87 Calibrated By RDO

Gauge-Oil Manometer Δ_p	Differential Pressure Gauge Δ_p	Pressure Difference %
0.050	0.050	0
0.100	0.105	5%
0.150	0.155	3.3%

Figure 2.15. Differential Pressure Gauge Calibration Data Sheet

2.5 Metering System

The metering system is calibrated before use and after each test series according to the schematic outlined in Figure 2.16. There are several options presented in the schematic. It is up to the sampler to choose the most appropriate option for his needs.

2.5.1 Wet Test Meter - The wet test meter must be calibrated and have the proper capacity. For Method 5G, the wet test meter should have a capacity of at least 1 L/min. No upper limit is placed on the capacity. However, the wet test meter dial should make at least one complete revolution at the specified flow rate for each of the three independent calibrations.

Wet test meters are calibrated by the manufacturer to an accuracy of ±1%. Calibration of the wet test meter must be checked initially upon receipt and yearly thereafter. This can be accomplished by using a spirometer or a liquid positive displacement system.

The following liquid positive displacement technique can be used to verify and adjust, if necessary, the accuracy of the wet test meter to within 1%.

1. Level the wet test meter by adjusting the legs until the bubble on the level located on the top of the meter is centered.
2. Adjust the water volume in the meter so that the pointer in the water level gauge just touches the meniscus.
3. Adjust the water manometer to zero by moving the scale or by adding water to the manometer.
4. Set up the apparatus and calibration system as shown in Figure 2.17.

    a. Fill the rigid-wall 5-gal jug with water to below the air inlet tube. Put water in the impinger or saturator and allow both to equilibrate to room temperature (about 24 h) before use.

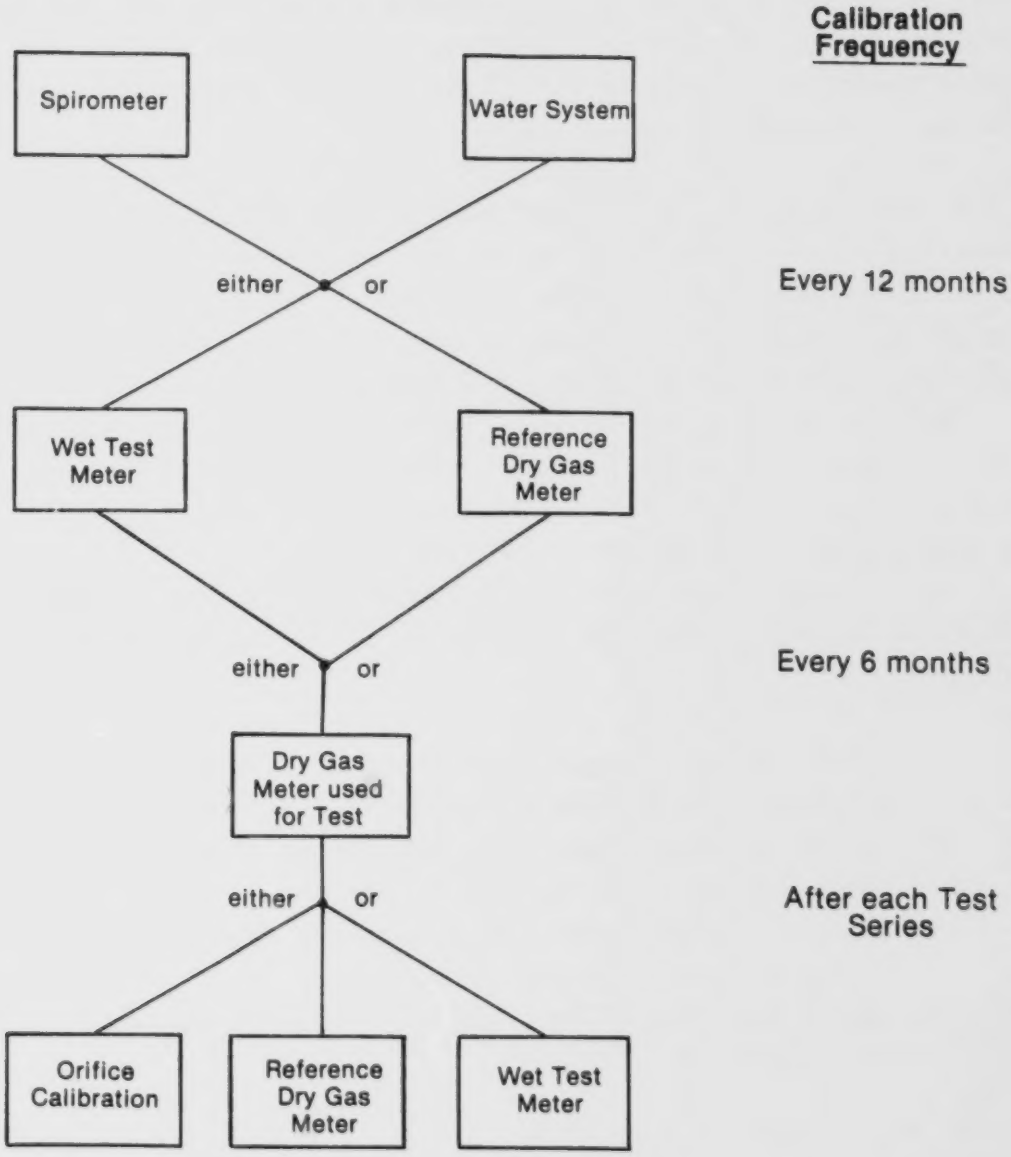

Figure 2.16. Dry Gas Meter Calibration Matrix

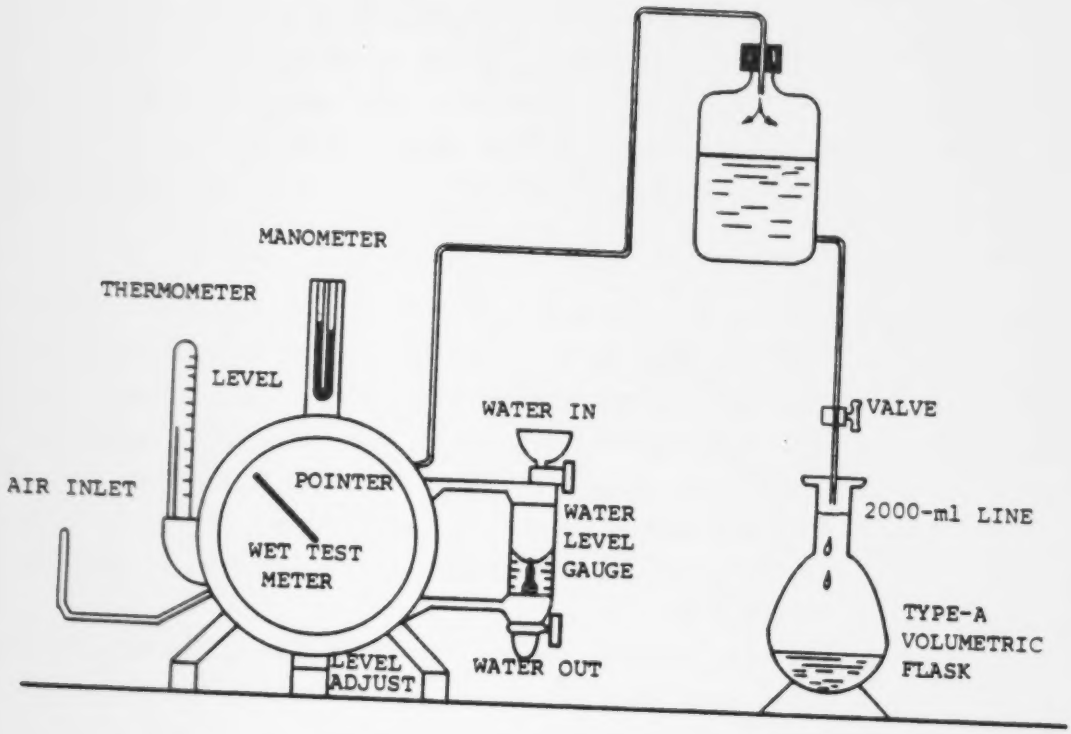

Figure 2.17. Calibration Check Apparatus for Wet Test Meter

b. Start water siphoning through the system and collect the water in a 1-gal container, located in place of the volumetric flask.

5. Check operation of the meter as follows:

   a. If the manometer is reading <10 mm (0.4 in.) H_2O, the meter is in proper working condition. Continue to step 6.
   b. If the manometer reading is >10 mm (0.4 in.) H_2O, the wet test meter is defective. If the wet test meter is defective and if the defect(s) (e.g., bad connections or joints) cannot be found and corrected, return it to the manufacturer for repair.

6. Continue the operation until the 1-gal container is almost full. Plug the inlet to the saturator. If no leak exists, the flow of liquid to the gallon container should stop. If the flow continues, correct for leaks. Turn the siphon system off by closing the valve and unplug the inlet to the wet test meter.
7. Read the initial volume (V_i) from the wet test meter dial and record on the wet test meter calibration log, as shown in Figure 2.18.
8. Place a clean, dry volumetric flask (Class A) under the siphon tube, open the pinch clamp, and fill the volumetric flask to the mark. The volumetric flask must be large enough to allow at least one complete revolution of the wet test meter with not more than two fillings of the volumetric flask.
9. Start the flow of water and record the maximum wet test meter manometer reading during the test after a constant flow of liquid is obtained.
10. Carefully fill the volumetric flask and shut off the liquid flow at the 2-L mark. Record the final volume shown on the wet test meter.
11. Steps 7 through 10 must be performed three times.

Wet test meter serial number _____ Date _____ Operator _____

Range of wet test meter flow rate _____ Volume of test flask V_s= _____

Satisfactory leak check ? ☐ Ambient temperature of equilibrated liquid in wet test meter and reservoir _____

Test Number	Manometer Reading,[a] mm H_2O	Final Volume (V_f), ℓ	Initial Volume (V_i), ℓ	Total Volume (V_m)[b], ℓ	Flask Volume (V_s), ℓ	Percent Error,[c] %
1						
2						
3						

[a]Must be less than 10 mm (0.4 inches) H_2O

Calculations

[b]$V_m = V_f - V_i$

[c]% error = $100\,(V_m - V_s)/V_s$ = _____ (± 1%)

Figure 2.18. Wet Test Meter Calibration Log

Since the water temperature in the wet test meter and reservoir has been equilibrated to the ambient temperature, and the pressure in the wet test meter will equilibrate with the water reservoir after the water flow is shut off, the air volume can be compared directly with the liquid displacement volume. Any temperature or pressure difference would be less than measurement error and would not affect the final calculations.

The error should not exceed ±1%. If this error magnitude is exceeded, check all connections within the test apparatus for leaks and gravimetrically check the volume of the standard flask. Repeat the calibration procedure and, if the tolerance level is not met, adjust the liquid level within the meter (see the manufacturer's manual) until the specifications are met.

2.5.2 Sample Metering System - The sample metering system, consisting of the drying tube, needle valve, pump, rotameter, and dry gas meter, is initially calibrated by stringent laboratory methods before it is used. The calibration is then rechecked after each wood heater test series. This recheck requires less effort than the initial calibration. When a recheck indicates that the calibration factor has changed more than 5%, the tester must again follow the complete laboratory procedure to obtain the new calibration factor. After the meter is recalibrated, the metered sample volume is multiplied by the calibration factor (initial or recalibrated) that yields the lower gas volume for each test run.

2.5.2.1 Initial Calibration - The metering system should be calibrated when first purchased, semiannually, and at any time the post-test check yields a calibration factor that does not agree to within 5% of the pretest calibration factor. A calibrated wet test meter or dry gas meter (properly sized, with ±1% accuracy) should be used to calibrate the metering system.

The metering system should be calibrated in the following manner before its initial use in the field and semiannually thereafter.

1. Leak check the metering system (drying tube, needle valve, pump, rotameter, and dry gas meter) as follows:

a. Temporarily attach a suitable rotameter (e.g., 0-40 cm^3/min) to the outlet of the dry gas meter and place a vacuum gauge at the inlet to the drying tube.

b. Plug the drying tube inlet. Pull a vacuum of at least 125 mm (5 in.) Hg.

c. Note the flow rate as indicated by the rotameter.

d. A leak of <0.02 L/min must be recorded or leaks must be eliminated. A leak of >0.02 L/min must be corrected.

e. Carefully release the vacuum gauge before turning off pump.

2. Assemble the apparatus, as shown in Figure 2.19, with the wet test meter replacing the drying tube and impingers. That is, connect the outlet of the wet test meter to the inlet side of the needle valve and the inlet side of the wet test meter to a saturator which is open to the atmosphere. Note: Use a drying tube only if a dry gas meter is used.

3. Run the pump for 15 min with the flow rate set at 450 cm^3/min to allow the pump to warm up and to permit the interior surface of the wet test meter to become wet.

4. Collect the information required on the sheet provided, Figure 2.20 (English units), by using sample volumes equivalent to at least five revolutions of the dry test meter. Three independent runs must be made.

5. Calculate Y_i for each of the three runs by using Equation 2.6. Record the values on the sheet.

$$Y_i = \frac{V_w\,(P_m + D_m/13.6)\,(t_d + 460^oF \text{ or } 273^oC)}{V_d\,P_m\,(t_w + 460^oF \text{ or } 273^oC)} \qquad \text{Eq. 2.6}$$

where:

Y_i = ratio for each run of volumes measured by the wet test meter and dry gas meter, dimensionless calibration factor;

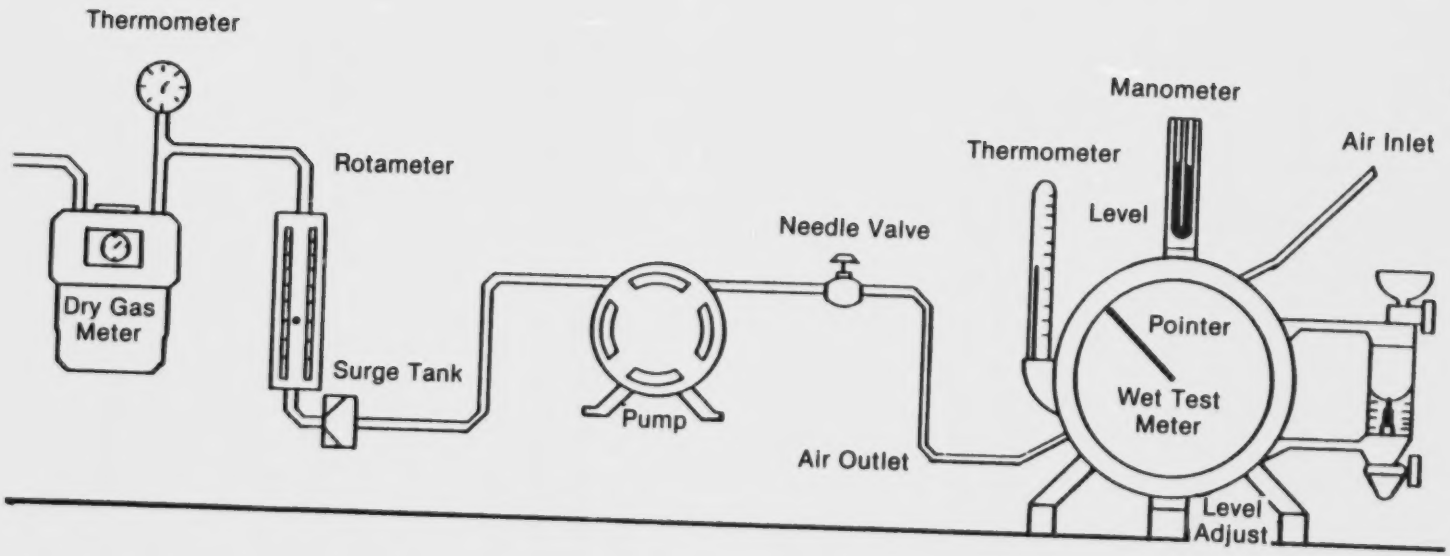

Figure 2.19. Sample Metering System Calibration Setup

Meter-Box Calibration Data and Calculation Form
(English Units)

Date 11/19/87 Meter Box Number DGM-1

Barometric Pressure, P_b = 29.98 in. Hg Calibrated by MWH

Rotameter or Orifice Manometer Setting (ΔH), in. H_2O	Gas Volume		Temperatures				Time (Θ), min	Y_i	Rotameter Ball Reading or $\Delta H@_i$ in. H_2O
	Reference Test Meter (V_w), ft^3	Dry Gas Meter (V_d), ft^3	Reference Test Meter (t_w), °F	Dry Gas Meter Inlet (t_{d_i}), °F	Dry Gas Meter Outlet (t_{d_o}), °F	Dry Gas Meter Avg[a] (t_d), °F			
0.2	.9142	.894	83.75	84	84	84	10	1.023	Not used
0.4	1.5957	1.577	83.3	84	83	83.5	10	1.011	
0.5	1.7847	1.766	83.3	83	82	82.5	10	1.008	
0.8	2.2641	2.251	83.4	82	82	82	10	1.001	
1.0	2.5190	2.506	82.4	82	82	82	10	1.002	
							Avg	1.009	

ΔH, in. H_2O	$\frac{\Delta H}{13.6}$	$Y_i = \frac{V_w P_b (t_d + 460)}{V_d (P_b + \frac{\Delta H}{13.6}) (t_w + 460)}$
.2	0.0147	1.023
.4	.0294	1.011
.5	.0368	1.008
.8	.0588	1.001
1.0	.0735	1.002

[a] If there is only one thermometer on the dry gas meter, record the temperature under t_d

Figure 2.20. Meter Box Calibration Data and Calculation Sheet (English Units)

V_w = volume measured by wet test meter, m^3 (ft^3);
P_m = barometric pressure at the meters, mm (in.) Hg;
D_m = pressure drop across the wet test meter, mm (in.) H_2O;
t_d = average temperature of dry gas meter, ^oC (^oF);
V_d = volume measured by the dry gas meter, m^3 (ft^3); and
t_w = temperature of wet test meter, ^oC (^oF).

6. Adjust and recalibrate or reject the dry gas meter if one or more values of Y_i fall outside the interval $Y \pm 0.02Y$, where Y is the average for three runs. Otherwise, the Y (calibration factor) is acceptable and is to be used for future checks and subsequent test runs.

2.5.2.2 Post-test Calibration Check - After each field test series, conduct a calibration check as in subsection 2.1.2 with the following exceptions:

1. The leak check is not conducted because a leak may have been corrected that was present during testing.
2. Three or more revolutions of the dry gas meter may be used.
3. Only two independent runs need be made.
4. If a temperature-compensating dry gas meter was used, the calibration temperature for the dry gas meter must be within 6^oC (10.8^oF) of the average meter temperature observed during the field test series.

When a lower meter calibration factor is obtained as a result of an uncorrected leak, the tester should correct the leak and then determine the calibration factor for the leakless system. If the new calibration factor changes the compliance status of the facility in comparison to the lower factor, either include this information in the report or consult with the Administrator for reporting procedures. If the calibration factor does not deviate by >5% from the initial calibration factor Y (determined in subsection 2.5.2), then the dry gas meter volumes obtained during the test series are acceptable. If the calibration factor does deviate by

>5%, recalibrate the metering system as in subsection 2.5.2. For the calculations, use the calibration factor (initial or recalibration) that yields the lower gas volume for each test run.

Figure 2.21 shows an example of a post-test dry gas meter calibration sheet.

2.6 Rotameter (Optional)

Method 5G recommends that the tester calibrate the rotameter prior to each test. Before calibration, the rotameter should be cleaned and maintained according to the manufacturer's instructions. It is recommended (optional) that the calibration curve and/or rotameter markings be checked upon receipt and then routinely checked with the post-test metering system check. The rotameter may be calibrated as follows:

1. Ensure that the rotameter has been cleaned as specified by the manufacturer and is not damaged.
2. Use the manufacturer's calibration curve and/or markings on the rotameter for the initial calibration. Calibrate the rotameter as described in the metering system calibration of subsection 2.5.2, and record the data on the calibration sheet (Figure 2.20).
3. Use the rotameter for testing if the pretest calculated calibration is within 5%. If, however, the calibration point is not within 5%, determine a new flow rate setting and recalibrate the system until the proper setting is determined.
4. Check the rotameter calibration with each post-test metering system check. If the rotameter check is within 10% of the 1000-cm^3/min setting, the rotameter is acceptable. If, however, the check is not within 10% of the flow setting, disassemble and clean the rotameter and perform a full recalibration.

Test Numbers Run #1 Date 12-15-87 Wood Heater Box fire

Barometric Pressure, P_b = 29.64 in. Hg Dry Gas Meter Number GM-2 Pretest Y 1.009

Rotameter or Orifice Manometer Setting, (ΔH), in. H_2O	Gas Volume		Temperature				Time (Θ), min	Vacuum Setting, in. Hg	Y_i	$Y_i = \frac{V_w P_b (t_d + 460)}{V_d\left(P_b + \frac{\Delta H}{13.6}\right)(t_w + 460)}$
	Reference Test Meter (V_w), ft^3	Dry Gas Meter (V_d), ft^3	Reference Test Meter (t_w), °F	Dry Gas Meter Inlet (t_{di}), °F	Dry Gas Meter Outlet (t_{do}), °F	Dry Gas Meter Average[a] (t_d), °F				
.45	2.551	2.548	72	73	73	73	15	3		1.002
.45	2.540	2.547	72	72	74	73	15	3		.998
.45	2.514	2.525	72	72	74	73	15	3		.996
									Y =	.999

[a] If there is only one thermometer on the dry gas meter, record the temperature under t_d

V_w = Gas volume passing through the reference test meter, ft^3

V_d = Gas volume passing through the dry gas meter, ft^3

t_w = Temperature of the gas in the reference test meter, F°

t_{di} = Temperature of the inlet gas of the dry gas meter, °F

t_{do} = Temperature of the outlet gas of the dry gas meter, °F

t_d = Average temperature of the gas in the dry gas meter, obtained by the average of t_{di} and t_{do}, °F

ΔH = Pressure differential across orifice or dry gas meter, in H_2O

Y_i = Ratio of accuracy of reference test meter to dry gas meter for each run

Y = Average ratio of accuracy of reference test meter to dry gas meter for all three runs; tolerance = pretest Y ±0.05Y

P_b = Barometric pressure, in. Hg

Θ = Time of calibration run, min

Note: Reference meter volumes are corrected for calibration factor

Figure 2.21. Post-Test Dry Gas Meter Calibration Data Sheet (English Units)

2.7 Analytical Balance

The analytical balance used to weigh the filters and beakers should be calibrated by the following procedure:

1. Zero the balance.
2. Place one of the five Class S weights on the balance. Record the balance reading for each weight.
3. Repeat the procedure with each of the remaining four weights (spanning the typical weighing range of the balance) and record the balance reading for each weight.
4. The balance readings for the weights must be within 0.1 mg of the actual weights.
5. If the balance readings are greater than ± 0.1 mg for either of the actual weights, repair the balance or contact the balance manufacturer.

TABLE 2.1. ACTIVITY MATRIX FOR CALIBRATION OF EQUIPMENT

Apparatus	Acceptance Limits	Frequency and Method of Measurement	Action if Requirements Are Not Met
Wet test meter or reference dry gas meter	Capacity of at least 2 L/min and an accuracy within 1.0%	Calibrate initially and then yearly by liquid displacement spirometer	Adjust until specifications are met, or return to manufacturer
Reference dry gas meter	$Y_i = Y \pm 0.01Y$ at a flow rate of about 0.015 m^3/min (0.5 ft^3/min) or at the sampling rate used	Calibrate versus wet test meter initially and annually thereafter	Repair and then recalibrate, or replace
Thermocouple/thermometer	Within 1.5% of the absolute temperature	Calibrate each initially as a separate component against a mercury-in-glass thermometer; after train is assembled before each field test, compare with mercury-in-glass thermometer	Adjust, determine a constant correction factor or reject
Rotameter	Clean and maintain according to manufacturer's instructions (required); calibrate to ±5% (recommended)	Initially and semiannually	Adjust and recalibrate, or reject
Barometer	Within 2.5 mm (0.1 in.) Hg of mercury-in-glass barometer or of weather station value	Calibrate initially by using a mercury-in-glass barometer; check semiannually	Adjust to agree with certified barometer

TABLE 2.1. ACTIVITY MATRIX FOR CALIBRATION OF EQUIPMENT (Continued)

Apparatus	Acceptance Limits	Frequency and Method of Measurement	Action if Requirements Are Not Met
Analytical balance	Weight within 0.1 mg of standard weights (Class S)	Use standard weight before weighing; 5-point calibration semiannually or if pretest check fails	Repair or return to manufacturer
Pitot tubes	Within measured values or calculated with a wind tunnel	Initially and every 6 months thereafter	Repair or return to manufacturer

3.0 PRETEST PROCEDURES

Pretest quality assurance procedures are discussed in two subsections. Section 3.1 describes activities and procedures to be performed prior to each certification test series. Section 3.2 describes activities and procedures to be performed prior to each individual test run. An activity matrix summarizing both precertification series and pretest run quality assurance activities is provided in Table 3.1 at the end of this section.

3.1 Precertification Test Series Procedures

A certification test series is defined by the wood heater regulation (Method 28, Section 2.2) as being a series of at least four test runs conducted for certification or audit purposes and which meets specific burn rate requirements. This subsection outlines precertification series activities and equipment checks. Figure 3.1 contains a precertification series checklist that is recommended to testers to ensure that all required activities are performed and that all equipment calibrations are current and records compiled prior to beginning a certification test series.

3.1.1 Dilution Tunnel Cleaning and Assembly - Method 5G requires that testers clean the inside of the dilution tunnel prior to each certification series. In most cases, this involves complete disassembly of the tunnel. Each tunnel section should be cleaned with a wire brush to ensure that deposited creosote is entirely removed. It is recommended that technicians performing this activity wear respirators, safety glasses, and appropriate protective clothing to minimize their exposure to creosote particles and dust.

The presence of creosote accumulation in the dilution tunnel has the potential to bias the particulate measurement by re-entraining or volatilizing wood smoke emissions deposited on the walls of the tunnel. This re-entrainment and volatilization is of most concern during high burn rate test runs.

Activity	Acceptable Yes	Acceptable No
Dilution Tunnel		
1. Has the dilution tunnel been cleaned immediately before the certification series?	✓	
2. Is the dilution tunnel reassembled leak-free and are all dimensions and specifications met?	✓	
Analytical Balance		
3. Has the balance been calibrated within the last six months?	✓	
4. Are calibration records available and compiled?	✓	
5. Has a single-point calibration check been performed and does the balance reproduce the weight to within 0.1 mg?	✓	
Pitot Tube		
6. Has Type-S Pitot tube been checked and calibrated within the last six months?	✓	
7. Has standard Pitot tube been cleaned and inspected immediately before the certification series?	N/A	

General Comments

Figure 3.1. Precertification Series Checklist

Activity	Acceptable Yes	Acceptable No
Volume Metering System		
8. Has the metering system been calibrated within the last six months?	✓	
9. Are calibration records available and compiled?	✓	
10. Was the most recent single-point metering system check acceptable?	✓	
Temperature Monitors		
11. Have all temperature monitors and readouts been calibrated within the last 6 months?	✓	
12. Are calibration records available and compiled?	✓	

General Comments

Figure 3.1. Precertification Series Checklist (Continued)

After cleaning, the tunnel should be reassembled according to the specifications in the reference method. All seams and joints should be properly sealed to prevent air leakage. Figure 3.2 contains a schematic of the dilution tunnel components and configuration. After reassembly of the tunnel and before beginning the first certification test run, the following key dimensions and specifications should be checked.

1. The length of duct between the hood inlet and the sampling location must be <9.1 m (30 ft).

2. Velocity traverse ports must be ≥1.2 m (4 ft) downstream of flow disturbances.

3. Sampling port location must be ≥1.2 m (4 ft) downstream of the velocity traverse ports.

4. Mixing baffles must be located upstream of the sampling section midway between the two elbow sections.

5. It is recommended that elbows, dampers, or other flow disturbances be located a minimum of 0.3 m (1 ft) downstream of the sampling port location.

3.1.2 Precertification Series Test Calibration Checks and Review of Calibration Records - Method 5G requires that a single-point analytical balance check be performed prior to each certification series. This check should be performed with a Class F calibration weight which corresponds to 50 to 150% of the weight of one filter. If the balance cannot reproduce the value of the calibration weight to within 0.1 mg, conduct a multipoint calibration before use. If used, a standard Pitot tube must be inspected and cleaned prior to each certification series. In addition, testers should review all existing equipment calibration records prior to the beginning of the certification series to ensure that the documentation is complete and that all calibrations have been performed within the time periods specified by the reference methods. If new thermocouples are prepared for each certification series, testers should remember to calibrate them accordingly.

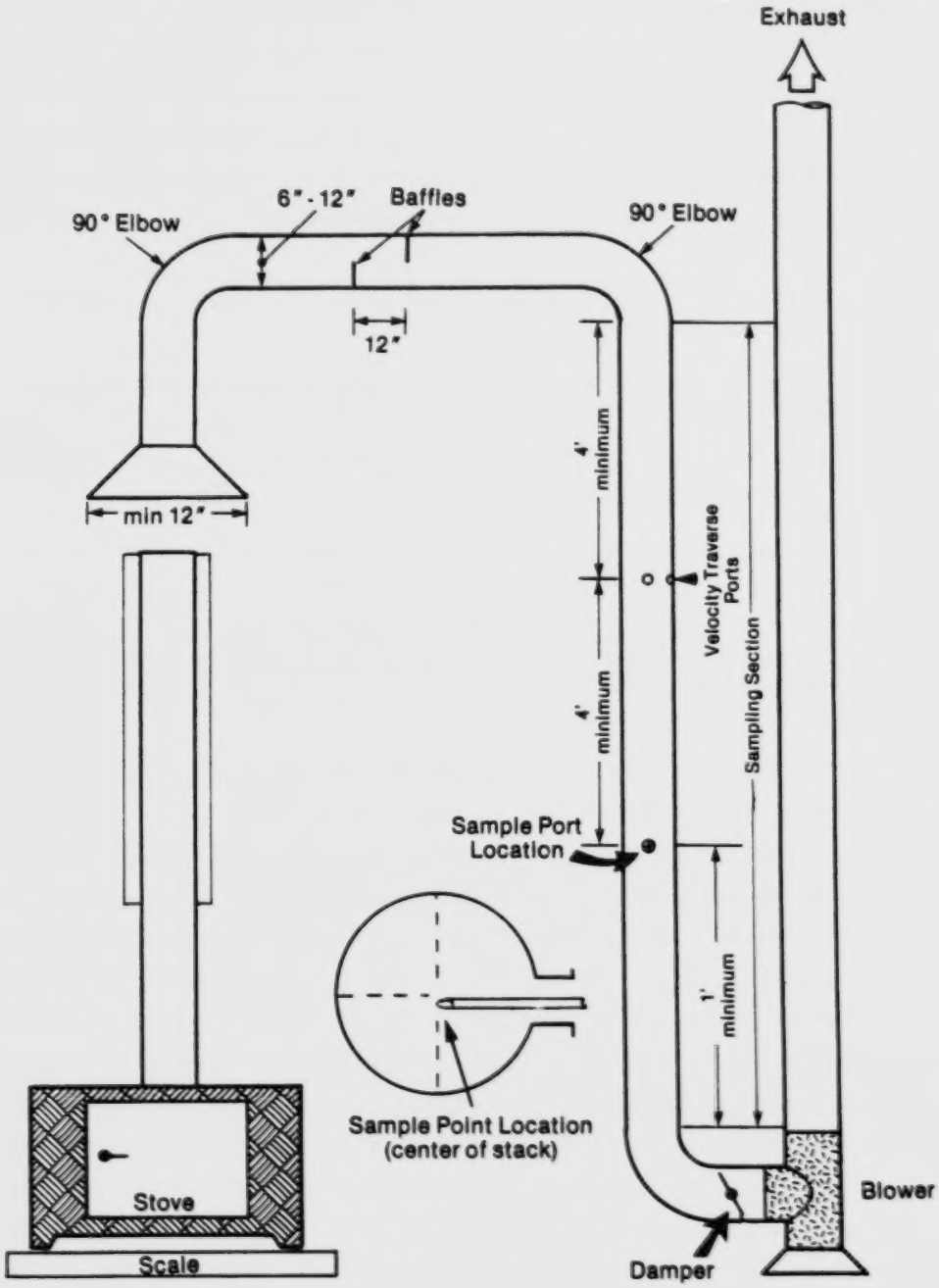

Figure 3.2. Schematic of the Dilution Tunnel Sampling System

3.2 Pretest Run Procedures - Dilution Tunnel

This subsection outlines activities and equipment checks that must be performed prior to each individual test run. After the heater has been installed as described in Method 28, the following dilution tunnel checks, measurements, and adjustments must be performed.

3.2.1 Preliminary Equipment Check - Visually inspect openings on the S-type Pitot tube for damage such as a scratch, nick, or dent that would tend to disrupt the airflow pattern. Check for proper alignment; that is, the centers of the two openings should be in a straight line such that when one opening is directed upstream, the other will be exactly 180° opposite, pointing downstream. If the damage or misalignment is obvious when visually inspected, the Pitot tube should be replaced or repaired. Check the weld spots holding the two legs together; if broken, repair. Calibration must be checked after repair if the Pitot tube does not conform to specifications.

Check the quick disconnects on the Pitot tube and check the connecting lines for proper operation. Clean the small metal parts of the disconnect; lubricate sparingly.

Blow out the Pitot tube legs from the line ends with compressed air, rinse with distilled water and then with acetone, and dry with compressed air.

Visually inspect the inclined manometer for damage. Repair or replace as necessary. Level the inclined manometer and fill with the proper specific gravity fluid. The recommended fluid is usually inscribed on the manometer. Check for leaks, especially around the fluid level plunger and drain screws. Replace the fluid level plunger or O-rings if leaks are detected. Clean the manometer when it is dirty and change the fluid at any sign of fading. If other differential pressure gauges are used, follow the manufacturer's checkout instructions.

Connect the Pitot tube and inclined manometer with the Pitot tube lines. Check for obstructions by blowing lightly on one Pitot tube leg and then the other. Watch the responses of the gauge. Also check for leaks by blowing into the downstream leg, sealing the opening, and noting any drop in

the pressure gauge reading. Check the upstream leg by drawing a slight vacuum, sealing, and noting the gauge. If there are no leaks, the gauge reading will remain constant. No change in the inclined manometer reading should occur. Check the manometer fluid reservoir for proper adjustment.

Check the Pitot tube calibration by using an orifice plate as a reference, following the procedures in Section 2.1 of this manual. Using the specified procedures, the Pitot tube and manometer measurement system should agree to the flow rate determined from the orifice plate measurement to within 10%. If not, repeat the Pitot tube and manometer checks, make appropriate adjustments, and repeat the calibration procedure before beginning the test run.

3.2.2 Preliminary Dilution Tunnel Measurements - Measure the inside diameter of the tunnel through each of the velocity traverse ports, and record the measured dimensions on a data sheet such as the one shown in Figure 3.3. Sketch the cross-sectional area of the dilution tunnel on the sample data sheet showing each of the velocity traverse port locations. Each velocity traverse port should be identified by a number or a letter and should be so designated on the sketch.

Using heat resistant tape, mark the Pitot tube to allow placement at each of the four traverse port locations and at the duct centroid. The four traverse points should correspond to 6.7, 25.0, 75.0, and 93.3% of the stack diameter when measured from the inside wall to the traverse point. When a 0.15-m (6-in.)-diameter dilution tunnel is used, traverse points should be located at 1.0, 3.8, 11.4, and 14.2 cm (0.4, 1.5, 4.5, and 5.6 in.) from the inside wall of the tunnel.

3.2.3 Induced Draft Check - Prior to starting the pretest ignition, locate the Pitot tube at the center of the dilution tunnel and visually check the alignment. Seal the port being used and all unused sampling and velocity traverse ports as tightly as possible to minimize disturbance of the tunnel gas flow. Operate the dilution tunnel blower and damper so that a flow rate

Wood Heater Model Boxfire Date 12/17/88

Run # 2 Operator GDR

Barometric Pressure (P_{bar}) 29.84 Static Pressure (P_s) 0.442 in. H_2O

Inside Diameter: Port A 5.95 in. Port B 5.97 in.

Tunnel Cross Sectional Area: 0.1937 ft^2

Pitot Tube Type: Std or Type S Std

Pitot Tube ID Number: Std 042

Traverse Point	Position (inches)	Velocity Head Δ_P (in. H_2O)	Tunnel Temperature (°F)	$\sqrt{\Delta_p}$
A - 1	0.40	0.032	88	.1788
A - 2	1.50	0.042	87	.2049
A - 3	4.50	0.046	88	.2145
A - 4	5.60	0.030	86	.1732
B - 1	0.40	0.034	87	.1844
B - 2	1.50	0.044	89	.2098
B - 3	4.50	0.038	88	.1949
B - 4	5.60	0.030	87	.1732
		Average		.1917

$$V_s = K_p C_p \left(\sqrt{\Delta_p} \right) \text{avg} \sqrt{\frac{T_s}{P_s M_s}}$$

where,

C_P = pitot tube coefficient, dimension less
= 0.99 for standard pitot
= 0.84 for Type S

Δ_P = manometer reading (in. H_2O)

T_S = average absolute dilution tunnel (°F + 460), (°C + 273)

P_s = absolute dilution tunnel gas pressure or $P_{bar} + P_g$

P_g = static pressure $\left(\frac{\text{in.}H_2O}{13.6} \right)$

M_s = 28.56, wet molecular weight of stack gas (alternatively, it may be measured

K_p = 85.49 pitot tube constant, (conversion factor for english units)
= 34.97 (conversion factor for metric units)

$\left(\sqrt{\Delta_p} \right)$ avg = Average of the square roots of the velocity heads (Δ_p) measured at each traverse point

Figure 3.3. Dilution Tunnel Traverse Data Sheet

Traverse Point	Position (inches)	Velocity Head Δp (in. H_2O)	Tunnel Temperature (°F)	$\sqrt{\Delta_p}$
A - Centroid	3.00			
B - Centroid	3.00			
				Average ($\sqrt{\Delta_p}$) centroid = _____

Adjustment Factor for Alternative Pitot Tube Placement:

$$F_p = \frac{(\sqrt{\Delta_p})_{avg}}{\overline{(\sqrt{\Delta_p})}_{centroid}}$$

where,

$(\sqrt{\Delta_p})_{avg}$ = Average of the square roots of the velocity heads measured at each traverse point, inches of H_2O

$\overline{(\sqrt{\Delta_p})}_{centroid}$ = Average of the square roots of the velocity heads measured at the tunnel centroid, inches of H_2O

$\Delta_{p(sp)} = \Delta_p$ measured at tunnel centroid during testing

Adjustment Factor Application:

$$V_s = K_p C_p F_p (\sqrt{\Delta_{p(sp)}})_{average} \sqrt{\frac{T_s}{P_s M_s}}$$

Cross Sectional Sketch of Dilution Tunnel Showing Ports and Pitot Tube Placement

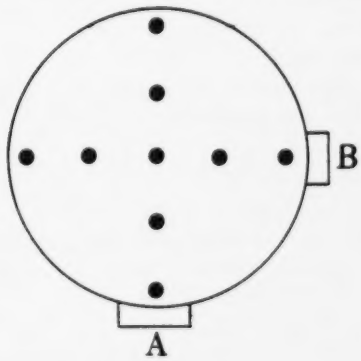

Figure 3.3. D on Tunnel Traverse Data Sheet (Continued)

of 4 sm^3/min (140 scfm) $\pm$ 10% is maintained or at the rate to be used in the test run. Close the doors of the wood heater and fully open the air supply controls. With a micromanometer or liquid manometer, measure and record the draft in the flue at a location no greater than 0.3 m (1 ft) above the flue connector at the wood heater exhaust collar. Adjust the distance between the top of the wood heater stack exhaust and the dilution tunnel hood so that the dilution tunnel induced draft is less than 1.25 Pa (0.005 in. H_2O). The induced draft measurement must be performed without a fire in the wood heater.

3.2.4 Smoke Capture Check - Begin the pretest ignition period described in Method 28, Section 6.3, maintaining the dilution tunnel flow rate at approximately 4 sm^3/min (140 scfm) or at the rate to be used in the test run. (A higher flow rate is allowed for high burn rate test runs as specified in Section 4.2.1 of Method 5G. See Section 10.0 of this manual.) After closing the doors to the wood heater, visually monitor the wood heater stack exhaust and verify that 100% of the exhaust gas is collected by the dilution tunnel hood. If less than 100% of the wood heater exhaust gas is collected, adjust the distance between the wood heater stack and the dilution tunnel hood until no visible exhaust gas is escaping. If an adjustment is required, stop the pretest ignition period and repeat the draft determination procedure.

3.2.5 Velocity Traverse - After completion of the induced draft and smoke capture checks, testers must perform a velocity traverse of the dilution tunnel to identify the point of average velocity. This point should be used for measuring the velocity of the tunnel gases during the test run. Alternatively, the average velocity calculated from the traverse may be used to calculate an adjustment factor to allow placement of the Pitot tube at the centroid of the tunnel. The velocity traverse must be conducted during the pretest ignition period prior to beginning the test run.

With the Pitot tube positioned at the centroid of the tunnel, measure the velocity head and adjust the dilution tunnel damper or blower until the velocity indicated by the Pitot is approximately 220 m/min (715 ft/min). In

a 0.15-m (6-in.) diameter dilution tunnel, this specified tunnel gas velocity corresponds to a Δp reading of approximately 0.041 in. H_2O when a Type-S Pitot is used and 0.029 in. H_2O when using a standard Pitot. Continue to read the Δp and tunnel gas temperature until the velocity has remained constant (less than 5% change) for at least 1 min. Once a constant velocity is obtained at the centroid of the duct, conditions are acceptable for beginning the velocity traverse.

Begin the velocity traverse by locating the Pitot tube at the first traverse point and measuring the velocity head and temperature. After the reading stabilizes, record the measurements on a data sheet similar to that shown in Figure 3.3. Moving the Pitot tube across the duct diameter by using the heat resistant tape markings as guidelines, locate the Pitot tube at each of the predetermined velocity traverse points. Keep the Pitot at each point for 1 to 2 min to ensure that the manometer has responded. Take care to maintain the correct Pitot tube alignment with the dilution tunnel (i.e., the tip facing directly into the tunnel gas flow). To prevent damage or clogging, be careful to avoid touching the tip to the wall of the duct. Measure and record the velocity head (Δp) and temperature at each location. After completion of the velocity traverse from the first port, remove the Pitot and reposition it in the second port and repeat the measurements at each of the four points.

Using data from the eight traverse points, determine the average velocity head as outlined in Section 6.0 of this manual. Calculate the tunnel gas volumetric flow rate to ensure that the flow rate is within 10% of 4 sm^3/min (140 scfm) (or a velocity of at least 220 m/min [715 ft/min] when larger ducts or flow rates are used for runs in which the burn rate exceeds 3 kg/h).

It is recommended that testers locate the Pitot and thermocouple at the duct centroid and calculate a velocity correction factor for the centroidal position. Figure 3.3 provides guidelines for this calculation.

As an alternative, move the Pitot tube across the duct diameter until a point corresponding to the average velocity head is located. Mount the Pitot tube at this location to ensure no movement during the test run and completely seal all ports to prevent any air leakage.

If a standard Pitot tube is used to perform the traverse, adequate proof must be furnished to show that the openings of the tube did nct plug up during the traverse period. The following procedure will provide sufficient evidence that plugging did not occur.

1. Measure the velocity head (Δp) reading at the final traverse point.

2. Clean out the impact and static holes of the standard Pitot tube by "back purging" with pressurized air, and then remeasure the Δp at the final point. If the Δp readings before and after the air purge are within (0.005 in. H_2O), the traverse is acceptable. If "back purging" at regular intervals is part of the procedure, comparative Δp readings should be taken (as above) for the last two back purges at which suitably high Δp readings are observed.

3. Record the Δp, and T_s for each traverse point on the data sheet (Figure 3.3).

4. After the traverse, check the differential pressure gauge zero setting and level indicator. If either has shifted, reset and repeat the traverse.

Before and during the traverse, a number of precautions should be taken.

1. The Pitot tube should be short enough for easy handling from outside the stack when held at any traverse point for safety reasons and for efficiency in the measurement process.

2. The alignment should be made visually with reference to the stack geometry and not by rolling or tipping the Pitot tube until a maximum response is observed.

3. If the gas stream contains a significant concentration of particulate matter, both legs of the Pitot tube should be blown out frequently during the velocity traverse.

4. All unused sampling ports must be plugged, and the port being used should be sealed as tightly as possible to minimize any disturbance on the gas flow pattern when making a velocity measurement. The port being used can be sealed with asbestos material, precut sponge, or duct tape depending on the temperature of the stack gas.

5. If liquid droplets are present in the gas stream, a liquid trap should be inserted in the gauge line leading to the upstream Pitot tube leg (impact opening). A trap may be required for both legs.

3.2.6 Measurement of the Static Pressure in the Dilution Tunnel - Three acceptable methods for measuring static pressure are given.

1. Install a tap perpendicular to the dilution tunnel gas flow, or insert a 6-mm (0.25 in.) steel tube into the sampling port while maintaining a good seal. Connect one side of a U-tube manometer to the tap and vent the other side of the manometer to the atmosphere.

2. Use the static pressure tap of a standard Pitot tube connected to one side of a manometer. (If the manometer reading is obviously negative, connect the static pressure tap to the other side of the manometer.) Vent the remaining side of the manometer to the atmosphere. Point the Pitot tube pressure opening (the unconnected end) directly into the flow and seal the port around the tube.

3. Use a Type S Pitot tube with the Pitot tube openings facing perpendicular to the gas stream. Connect only one leg of the Pitot tube to the manometer; vent the other side of the manometer to the atmosphere. Take extreme care to align the probe properly and to seal the port around the Pitot tube.

3.3 Method 5G-1 Pretest Run Procedures

This subsection describes pretest run activities and equipment checks that pertain specifically to sampling and analysis associated with the Method 5G-1 approach. A schematic of the EPA Method 5G-1 sampling train is shown in Figure 3.4. Each train must be in compliance with the specifications of the reference method.

3.3.1 Sampling Equipment Preparation, Cleaning, and Checks (Method 5G-1) -

Sampling Train Components - All sampling train components should be cleaned with tap water and detergent, followed by rinses with deionized distilled water and acetone, and then allowed to air dry. Special attention

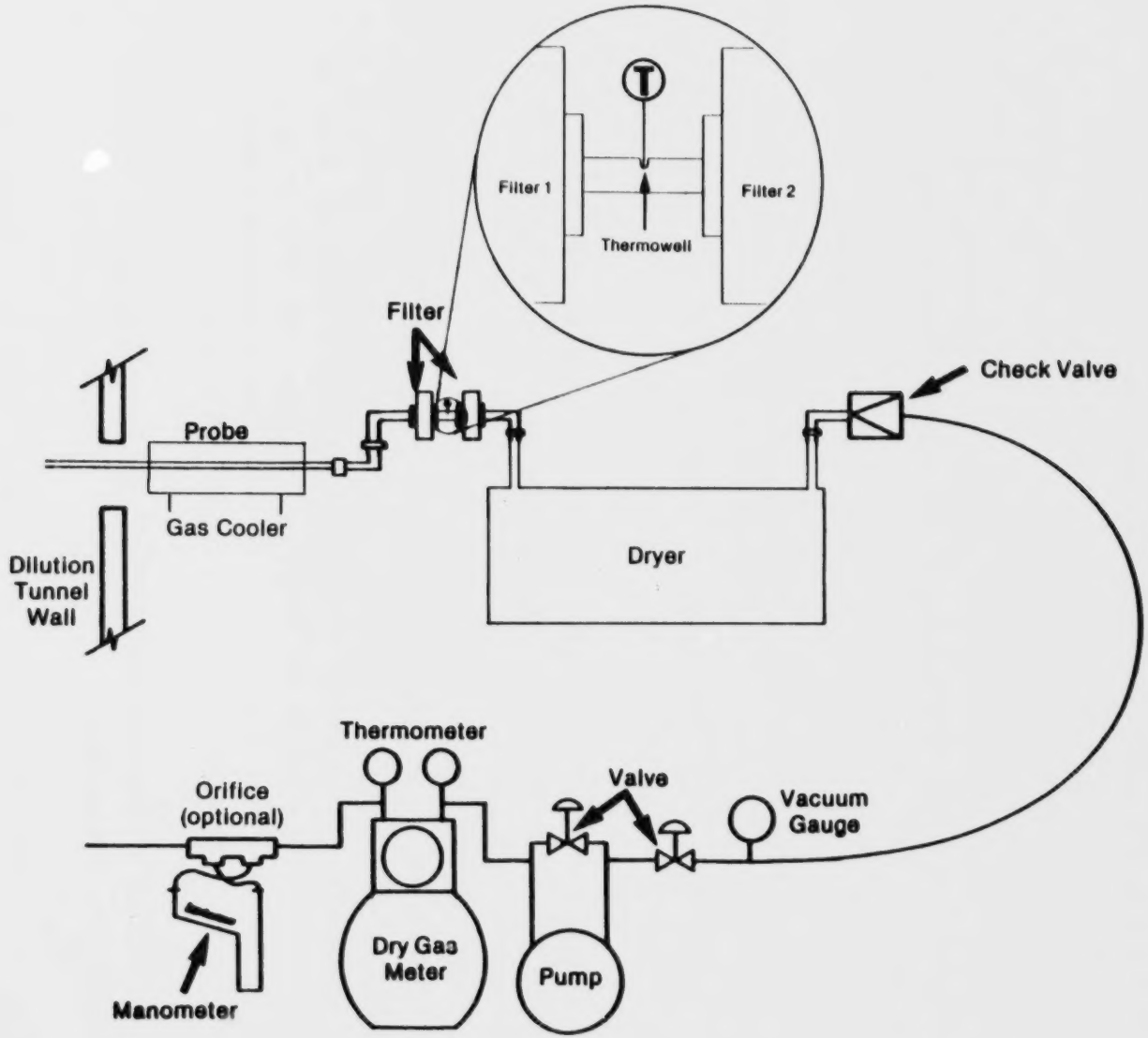

Figure 3.4. Schematic of Method 5G-1 Sampling Train

should be given to the cleaning of the sample train probe, filter holder assemblies, and frits. Note that the post-test cleaning of the probe to recover samples requires much more rigorous cleaning, as described in Section 5.0 of this manual. All glassware should be visually inspected for cracks or breakage. The probe should be sealed at the inlet or tip and checked for leaks at a vacuum of at least 130 mm Hg (5 in. Hg). The probe must be leak free under these conditions.

Pump - The vacuum pump should be serviced as recommended by the manufacturer, or every three months, or upon erratic behavior. Check oiler jars, if used, every 10 tests.

Silica Gel (Optional) - If silica gel is used to remove moisture from the sample gas stream, either dry the used silica gel at 175°C (350°F) or use fresh silica gel and place a 200 to 300 g portion in an airtight container.

Thermometers - The filter temperature, impinger exit, and dry gas meter thermometers should be compared to a mercury-in-glass reference thermometer at ambient temperature.

Barometer - The field barometer should be compared with a mercury-in-glass barometer or the weather station reading, after an elevation correction is made.

Probe Cooling System - Check the components of the optional probe cooling system to ensure proper operation. The probe cooling system must be capable of maintaining front filter temperatures less than 32°C (90°F).

Rotameters - If rotameters are used for proportional sampling, check to ensure that the rotameter is not damaged and that the flow indicator moves freely. At the sign of erratic behavior, the rotameter should be cleaned according to the maintenance procedure recommended by the manufacturer.

3.3.2 Sampling and Analysis Reagent Checks and Pretest Weight Determinations (Method 5G-1) -

Filters - Check the filters visually against light for irregularities, flaws, and pinhole leaks. Either label the filters on the backside near the edge by using numbering machine ink, or label the petri dishes and keep the

filters in their respective dishes except during actual sampling and weighing. Record the filter type, size, and identification number on an analytical data sheet. An example data sheet is shown in Figure 3.5. Note: Tare weights of filters plus petri dishes (if used) should be determined after petri dishes are labeled.

Desiccate three filters at $20^{\circ} \pm 5.6^{\circ}C$ ($68^{\circ} \pm 10^{\circ}F$) and at ambient pressure for at least 24 h, and then weigh at 2-h intervals until weight changes of <0.5 mg from the previous weighings are achieved. Two filters are to collect particulate matter in the Method 5G sampling train, and the remaining filter is a quality control blank which should be treated as the sample filters throughout the procedure. During each weighing, the filter must not be exposed to the laboratory atmosphere for >2 min or to a relative humidity of >50%. The temperature and relative humidity of the weighing area should be recorded during each series of weighings. An alternative procedure is oven drying the filters at $105^{\circ}C$ ($220^{\circ}F$) for 2 to 3 h followed by desiccation for 2 h and by weighing to a constant weight, as described above. Tare weights that increase with successive weighings is an indication that desiccant should be replaced or that time and relative humidity requirements related to weighings are not met. In such cases, corrective actions should be taken.

A 0.5 g Class F standard weight should be placed on the analytical balance prior to each series of weighings. Either the balance should agree within 0.5 mg of the Class F weight or the balance should be corrected. For each filter weighing, record the date and clock time, filter weight, room temperature, relative humidity, and results of the preweighing balance checks on a data sheet similar to that shown in Figure 3.5. Record all weights to the nearest 0.1 mg.

Acetone Blank - Acetone is required for rinsing the sampling train probe and glassware during the sample recovery procedures. For purposes of subtracting the residue introduced by the solvent wash from the sampling train catch, testers should determine the amount of residue contained in the solvent wash. Measure 100 mL of the acetone designated for train recovery, volumetrically or gravimetrically, and transfer to a 250-mL or smaller

Date 12-14-87 Analyst RDO Run # 2

Desiccator # 1 Indicator/Condition good Air Flow/Condition OK

Filter Type 100 mm A/E Acetone Recovery Solvent (Lot #) 12-A

PRETEST WEIGHTS

Action	Time/Date	Beaker # (g)	Beaker #	Front Filter #	Back Filter #	Filter Blank #	Room Conditions Temp.(°F)	Room Conditions Rel. Hum.(%)
		205		R13	R14	R15		
Start	12/14/87 1500	103.4892		.5782	.5775	.5795	75	45
24 hr Check	12/15/87 1600	103.4880		.5720	.5715	.5725	72	48
2 hr	12/15/87 1800	103.4880		.5713	.5713	.5719	68	42
2 hr	12/15/87 2000	—		.5711	—	.5715	66	41

POST-TEST WEIGHTS

Action	Time/Date	Beaker # Contents: Vol: 110 ml	Beaker # Contents: Vol:	Front Filter #	Back Filter #	Filter Blank #	Room Conditions Temp.(°F)	Room Conditions Rel. Hum.(%)
		205		R-13	R-14	R-15		
pre-desicc	12-19-87 930 hr	103.5140		.6372	.6002	.5745	70	42
36 hr Check	12-19-87 2100 hr	103.4995		.6170	.5775	.5735	65	45
2 hr	12-19-87 2300 hr	103.4990		.6161	.5769	.5730	62	46
2 hr	12-20-87 100 AM	—		.6160	.5767	.5728	62	41

Filter WT blank must agree to within 1.0 mg

Front filter WT post .6160 − filter WT pre .5714 = 44.9 mg

Back filter WT post .5728 − filter WT pre .5715 = 1.3 mg

Beaker WT post _____ − beaker WT pre _____ = _____

Figure 3.5. Data Sheet for Gravimetric Determinations (Method 5G-1)

beaker that has been previously cleaned, desiccated, and weighed to a constant weight. Place the beaker in a contaminant-free area and evaporate the solvent blank to dryness at ambient temperature and pressure. Desiccate and weigh to a constant weight. Record the acetone lot number, the volume or weight of the acetone blank, and other weighing data as described earlier in this subsection. Record all weights to the nearest 0.1 mg.

Note: Only acetone with low blank values (<0.001%) shall be used. In no case shall a blank value of greater than 0.001% of the weight of acetone used be subtracted from the sample weight.

Sample Recovery Containers - Four sample recovery containers are required for the recovery of Method 5G-1 train components. These include three petri dishes for the three filters and a glass container for the probe rinses. Sample recovery containers should be cleaned with tap water and detergent and rinsed with deionized, distilled water and then acetone. Label each sample recovery container with a unique number and record on the analytical data sheet. After drying at ambient conditions, sample recovery containers should be desiccated at $20^{\circ} \pm 5.6^{\circ}C$ ($68^{\circ} \pm 10^{\circ}F$) and at ambient pressure for at least 24 h and weighed at 2-h intervals to a constant weight. Note that sample recovery containers should be handled with gloves or with tweezers to prevent weight gain introduced by handling. Pretest weights and supporting information should be recorded on data sheets similar to that shown in Figure 3.5. All pretest tare weights should be recorded to the nearest 0.1 mg.

3.3.3 Equipment Identification (Method 5G-1) - After all equipment cleaning and checks are complete, list the identification numbers and/or other unique descriptors for each piece of equipment to be used in the test run. Equipment identification should be identical on pretest run data sheets, test run data sheets, and calibration records. Figure 3.6 contains an example sheet that will assist testers in this task.

3.3.4 Sampling Train Preparation and Assembly (Method 5G-1) - During preparation and assembly of the sampling train, cover all openings where contamination could occur until just prior to assembly or until sampling is

Run Number 3

Date 12-22-87 Operator RJD

Wood Heater

Manufacturer

Model Box fire

Facility Conditions

Barometric Pressure 28.75

Air Velocity 40ft/min

Room Temperature 70° F

Relative Humidity 40%

Wood Heater Conditions

Date Wood Heater Stack Cleaned 12-15-87

Date Dilution Tunnel Cleaned 12-21-87

Balance Check 12-22-87

Induced Draft Check 12-22-87

Heater Weight Check OK

Liquid Seal Check OK

Wood Load 18.5 lb

Pretest Weight 6 lb

Flow Rate 140 cfm ± 10% O.K.

Velocity Factor N/A

Pitot Leak Check

Side A good

Side B good

Pitot Tube

ID Number S-02

Type Type S

Sampling Train Leak Check .002 CFM @ 15"

Identifications

Thermocouples ID No.

Top TC 15

Bottom TC 12

Right Side TC 9

Left Side TC 7

Back TC 10

Catalyst TC 8

Flue TC 13

Room TC 14

Dilution Tunnel TC 6

Sampling Train ID Numbers

Dry Gas Meter DGM-2

Rotameter N/A

Probe #1

Filter Front R-18

Filter Back R-19

Filter Thermocouple TC-5

Train Exit Thermometer TC-4

Figure 3.6. Pretest Run Data Sheet (Methods 5G-1 and 5G-2)

about to begin. With tweezers or clean disposable surgical gloves, place one labeled (identified) and weighed 100-mm (4-in.) diameter filter in each of the two sampling train filter holders and one into a quality control blank filter holder. Be sure that each of the filters is properly centered and the gasket properly placed so as to prevent the sample gas stream from circumventing the filter. Check each of the filters for tears after assembly is completed. Assemble the sampling train as shown in Figure 3.4. Place the filter holders in series with the backup filter holder located 25 to 100 mm (1 to 4 in.) downstream from the primary filter holder. Install a temperature gauge at the exit side of the first filter holder so that the sensing tip of the temperature gauge is in direct contact with the sample gas or in a thermowell as shown in Figure 3.4. Alternatively, the sensing tip of the temperature gauge may be installed at the inlet side of the front filter holder. Assemble a sample-gas drying system to remove moisture prior to the dry gas meter. Testers have the option of selecting any drying system capable of removing water from the sample gas to less than 1.5% moisture (volume percent). Install a temperature monitor or wet-bulb/dry-bulb psychrometer to demonstrate that the drying system meets the reference method specifications.

3.3.5 Pretest Run Sampling Train Leak Check - A pretest leak check is highly recommended but not required. However, the sampling train must be leak free at the end of the test run, or the sample is not valid. If the tester opts to conduct the pretest leak check, the following procedure should be used.

After the sampling train has been assembled, leak check the train by plugging the nozzle and pulling a vacuum of at least 130 mm (5 in.) Hg. The following leak check instructions are adapted from APTD-0581[2] and APTD-0576.[3] Start the pump with the bypass valve fully open and the coarse-adjust valve closed. Open the coarse-adjust valve and then slowly close the bypass valve until the desired vacuum is reached. Do not reverse the direction of the bypass valve; this will cause water to back up from the

impingers or drying system into the filter holder. If the desired vacuum is exceeded, either leak check at this higher vacuum or end the leak check as described below and start over.

When the leak check is complete, first slowly remove the plug from the inlet to the probe or the filter holder and then close the coarse-adjust valve and immediately turn off the vacuum pump. (This prevents water in the drying system or impingers from being forced back into the filter holder and prevents silica gel, if used, from being forced back into the third impinger.) Visually check to be sure water did not contact the filter and that the filter has no tears before beginning the test. Leakage rates must be less than 4% of the average sampling rate expected, or 0.00057 m^3/min (0.02 cfm).

3.4 Method 5G-2 Pretest Run Activities

This subsection describes pretest run activities and equipment checks that pertain specifically to sampling and analysis associated with the Method 5G-2 approach. The Method 5G-2 sampling train is identical to the Method 5H sampling train.

3.4.1 Sampling Equipment Preparation, Cleaning, and Checks (Method 5G-2) - A schematic of the EPA Method 5G-2 sampling train is shown in Figure 3.7. Commercial models of this system are available. Each train must be in compliance with the specifications of Method 5G, Section 7.1 (see section 10.0 of this manual).

Probe - Clean the probe internally by brushing first with tap water, then with deionized distilled water, and finally with acetone; allow the probe to air dry. In extreme cases, the probe can be cleaned with stronger reagents. In either case, the objective is to leave the probe free from contaminants. (Note that post-test cleaning of the probe to recover samples requires much more rigorous cleaning, as described in Section 5.0 of this manual.) If used, the optional probe heating system should be checked to see that it is operating properly. The probe should be sealed at the inlet or tip and checked for leaks at a vacuum of 130 mm (5 in.) Hg, and the probe must be leak free under these conditions.

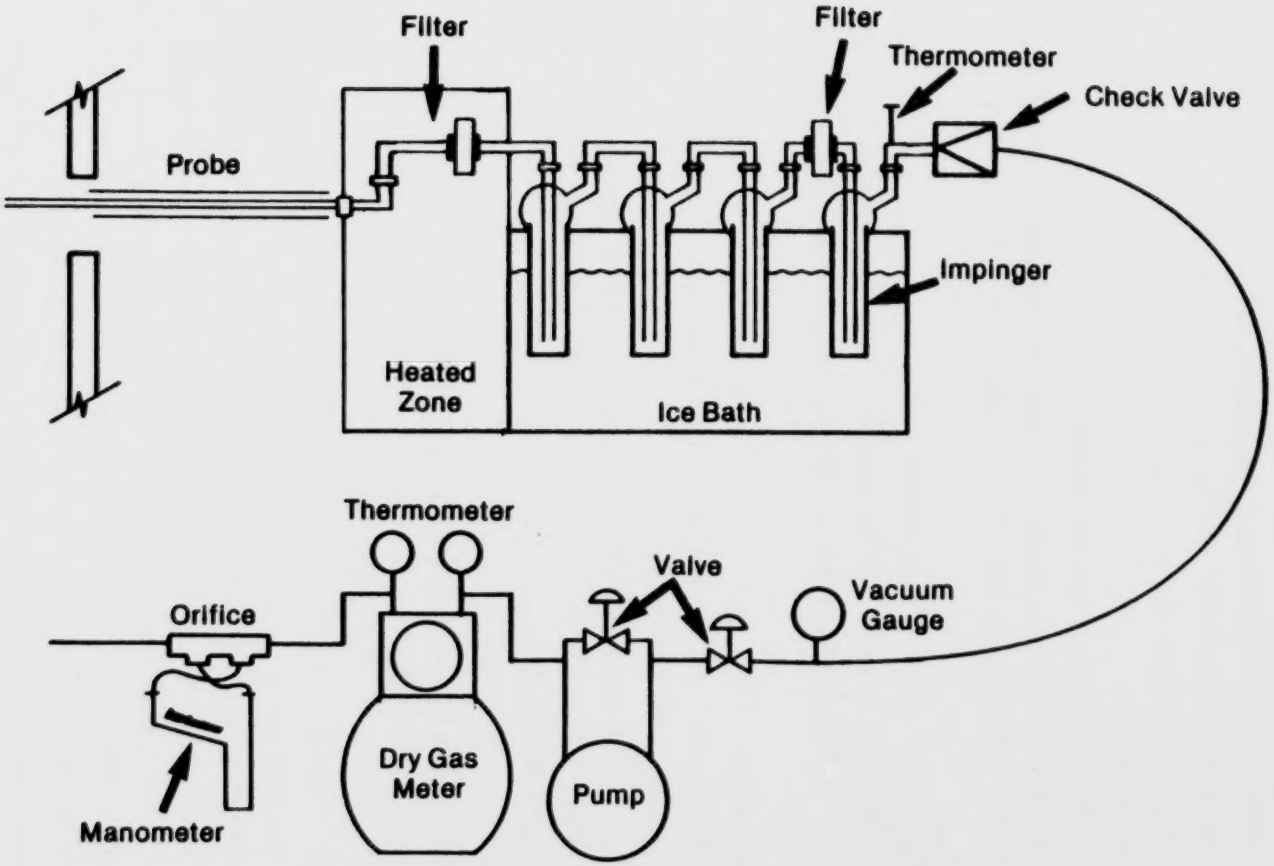

Figure 3.7. Schematic of Method 5G-2 Sampling Train

Impingers, Filter Holders, and Glass Connectors - All glassware should be cleaned first with detergent and tap water, then with deionized distilled water, followed by rinses with acetone and dichloromethane. All glassware should be visually inspected for cracks or breakage and then repaired or discarded if defective.

Pump - The vacuum pump should be serviced as recommended by the manufacturer, or every three months, or upon erratic behavior (non-uniform or insufficient pumping action). Check oiler jars, if used, every 10 test runs.

Dry Gas Meter - If a dry gas meter calibration check has not been performed within the previous three months, it is recommended that a single-point check be made by using the procedure in Section 5.2.1 of this manual.

Thermocouples - The filter holder, dryer system exit, and dry gas meter thermocouple readings should be compared to a mercury-in-glass reference thermometer at ambient temperature.

Barometer - The test facility barometer should be compared with a mercury-in-glass barometer or the weather station reading, after a correction for elevation is made, prior to each test run.

3.4.2 Sampling and Analysis Reagent Checks and Pretest Weight Determinations (Method 5G-2) -

Filters - Check the filters visually against light for irregularities, flaws, and pinhole leaks. Either label the filters on the backside near the edge with numbering machine ink, or label the petri dishes and keep the filters in their respective dishes except during actual sampling and weighing. Record the filter type, size, and identification number on an analytical data sheet. Note: Tare weights of filters plus petri dishes (if used) should be performed after petri dishes are labeled.

Desiccate three filters at $20^{\circ} \pm 5.6^{\circ}C$ ($68^{\circ} \pm 10^{\circ}F$) and at ambient pressure for at least 24 h, and then weigh at 2-h intervals until weight changes of <0.5 mg from the previous weighings are achieved. Two filters are to collect particulate matter in the Method 5G sampling train, while

the remaining filter is to be used as a quality control blank to provide a check on the accuracy of the filter recovery and weighing procedure. The blank filter should be treated in a manner identical to the sample filters throughout the entire procedure. During each weighing, the filter must not be exposed to the laboratory atmosphere for >2 min or to a relative humidity of >50%. An alternative procedure to prepare filters prior to sampling is oven drying the filters at 105°C (221°F) for 2 to 3 h followed by desiccation for 2 h and by weighing to a constant weight, as described above. An increase in tare weights with successive weighings is an indication that desiccant should be replaced or that time and relative humidity requirements related to weighings are not met. In such cases, corrective actions should be taken.

Prior to each series of weighings, the analytical balance should be leveled and zeroed. A single-point calibration check should be performed by placing a 0.5-g Class F standard weight on the analytical balance prior to each series of weighings. Either the balance should agree to within 0.5 mg of the Class F weight, or the balance should be recalibrated. A data sheet should be kept with the balance at all times for recording the dates and acceptabilities of the balance checks.

For each filter weighing, record the date and clock time, filter weight, room temperature, relative humidity, and results of the balance checks on a data sheet similar to that shown in Figure 3.8. Record all weights to the nearest 0.1 mg.

Water - Each of the first two impingers requires 100 mL of deionized distilled water, conforming to ASTM Specification D1193-77,[6] Type 3. To eliminate high blanks on test samples, run water blanks prior to testing. Measure 200 mL of water volumetrically or gravimetrically and transfer to a tared 250-mL beaker. Evaporate to dryness at 105°C (221°F). Desiccate for at least 24 h and weigh at 2-h intervals until weight changes of <0.5 mg from the previous weighings are achieved.

Silica Gel - Either dry the used silica gel at 175°C (350°F) or use fresh silica gel and weigh several 200- to 300-g portions in airtight containers to the nearest 0.5 g. Record the total weight (silica gel plus

Date 12-16-87 Analyst GDR Run # 4

Desiccator # 2 Indicator/Condition OK Air Flow/Condition ON

Filter Type 47 mm A/E Acetone Recovery Solvent (Lot #) 11-13

PRETEST WEIGHTS

Action	Time/Date	Beaker #	Beaker # (grams)	Front Filter #	Back Filter #	Filter Blank #	Room Conditions Temp.(°F)	Room Conditions Rel. Hum.(%)
		110	111	S-1	S-2	S-3		
Start	12-16-87 1000 hrs	105.4921	104.2831	.2782	.2795	.2791	75	40
24hr	12-17-87 1030	105.4910	104.2910	.2780	.2785	.2785	76	40
2hr	12-17-87 1230	105.4908	104.2907	.2780	.2783	.2784	78	41

POST-TEST WEIGHTS

Action	Time/Date	Beaker # Contents: Vol:	Beaker # Contents: Vol:	Front Filter #	Back Filter #	Filter Blank #	Room Conditions Temp.(°F)	Room Conditions Rel. Hum.(%)
		110	111	S-1	S-2	S-3		
pre-desicc.	12-18-87 1300	105.5862	104.3231	.2853	.2799	.2815	70	45
36hr	12-19-87 2200	105.5108	104.2949	.2801	.2790	.2795	65	47
2hr	12-19-87 2430	105.5097	104.2935	.2800	.2790	.2785	62	48
2hr	12-20-87 230	105.5095	104.2932	—	—	.2783		

Filter WT blank must agree to within 1.0 mg

Front filter WT post .2800 - filter WT pre .2780 = 2.0 mg

Back filter WT post .2790 - filter WT pre .2783 = 0.7 mg

Beaker WT post .5095 - beaker WT pre .4908 = 18.7 mg

-.2932 -.2907 2.5 mg

Figure 3.8. Data Sheet for Method 5G-2 Gravimetric Determinations

container) for each container. (Method 5G-2 allows testers to use a default value for tunnel gas moisture of 4% by volume. The silica gel does not have to be weighed if the default moisture content is used for calculations.)

Ice - Crushed ice is needed to keep the gas that exits from the last impinger below 20°C (68°F).

Stopcock Grease - Silicone grease that is acetone insoluble and heat stable may be used sparingly at each connection point of the sampling train to prevent gas leaks. This is not necessary if screw-on connectors with Teflon (or similar) sleeves are used.

Acetone Blank - Acetone is required for rinsing the sampling train probe and glassware during the sample recovery procedures. For purposes of subtracting the quantity of residue introduced to the sample by the solvent wash, testers should determine the amount of residue contained in the acetone. From the same acetone lot that will be used for train recovery, measure 100 mL of the solvent volumetrically or gravimetrically and transfer to a 250-mL or smaller beaker that had been previously cleaned, desiccated, and weighed to a constant weight. Place the beaker in a contaminant-free area and evaporate the solvent blank to dryness at ambient temperature and pressure. Desiccate and weigh to a constant weight. Record the acetone lot number, the volume or weight of the acetone blank, and other weighing data as described earlier in this subsection. Record all weights to the nearest 0.1 mg.

Note: Only acetone with low blank values (<0.001%) shall be used. In no case shall a blank value of greater than 0.001% of the weight of acetone used be subtracted from the sample weight.

Dichloromethane Blank - Measure 75 mL of the dichloromethane to be used for the extraction of impinger water and treat the same as the acetone blank.

Sample Recovery Containers - Method 5G-2 requires a minimum of four sample recovery containers. Label each container with a unique identification number. These include a petri dish for the filters, a 250-mL beaker for the probe rinse, a 250-mL beaker for the dichloromethane impinger

extracts, and a 500-mL beaker for impinger water. Sample recovery containers should be cleaned with tap water and detergent and rinsed with deionized, distilled water and then acetone. After drying at ambient conditions, sample recovery containers should be desiccated at $20^{o} \pm 5.6^{o}C$ ($68^{o} \pm 10^{o}F$) and at ambient pressure for at least 24 h and weighed at 2-h intervals to a constant weight. Constant weighings should be recorded to the nearest 0.1 mg.

3.4.3 Equipment Identification (Method 5G-2) - After all equipment cleaning and checks are complete, list identification numbers and/or other unique descriptors for each piece of equipment on a data sheet. Figure 3.6 contains an example sheet that will assist testers in this task.

3.4.4 Sample Train Preparation and Assembly (Method 5G-2) - During preparation and assembly of the sampling train, cover all openings where contamination could occur until just prior to assembly or until sampling is about to begin. With tweezers or clean disposable surgical gloves, place one labeled (identified) and weighed filter in each of the sampling train filter holders and one into a blank filter holder for quality control. Be sure that each of the filters is properly centered and the gasket properly placed so as to prevent the sample gas stream from circumventing the filter. Check each of the filters for tears after assembly is completed.

Place 100 mL of deionized distilled water in each of the first two impingers, leave the third impinger empty, and transfer approximately 200 to 300 g of silica gel from its container to the fourth impinger. Note: If testers opt to measure the moisture content of the tunnel gas rather than use the 4% volume default value, the weight of the silica gel must be determined to the nearest 0.5 g and recorded.

Assemble the train as shown in Figure 3.7. Install temperature gauges at the exit side of the front filter and at an exit location on the fourth impinger. Use a very light coat of stopcock grease on all ground glass

joints, if necessary, for leak-free connections. If stopcock grease is used, grease only the outer portion of ground glass joints to avoid the possibility of contamination.

3.4.5 Pretest Run Sampling Train Leak Check (Method 5G-2) - Leak checks are necessary to ensure that the measured sample volume is not biased by dilution air. A pretest leak check is highly recommended, but not required. However, the sampling train must be leak-free at the end of the test run, or the sample is not valid. If the tester opts to conduct the pretest leak check, the following procedure should be used.

Assemble the sampling train as prescribed and, if used, set the optional filter heating system at the desired operating temperature. Allow time for the temperature to stabilize. Leak check the sampling train at a minimum of 130 mm (5 in.) Hg vacuum. Leakage rates >4% of the average sampling rate or 0.00057 m^3/min (0.02 ft^3/min), whichever is less, are unacceptable.

The following leak check instructions for the sampling train are taken from APTD-0581[2] and APTD-0576.[3] Start the pump with the bypass valve fully open and the coarse-adjust valve closed. Open the coarse-adjust valve and then slowly close the bypass valve until the desired vacuum is reached. Do not reverse the direction of the bypass valve. This will cause distilled water to back up from the impingers into the filter holder. If the desired vacuum is exceeded, either leak check at this higher vacuum or end the leak check as described below and start over.

When the leak check is complete, first slowly remove the plug from the inlet to the probe or the filter holder, then close the coarse-adjust valve, and immediately turn off the vacuum pump. (This prevents the water in the impingers from being forced back into the filter holder and prevents the silica gel from being forced back into the third impinger.) Visually check to be sure water did not contact the filter and that the filter has no tears before beginning the test.

3.5 Method 5G-3 Pretest Run Activities

This subsection describes pretest run activities and equipment checks that pertain specifically to sampling and analysis associated with the Method 5G-3 approach as described in Section 7.2 of Method 5G (see Section 10.0 of this manual).

3.5.1 Sampling Equipment Preparation, Cleaning, and Checks (Method 5G-3) - Dual sampling trains are required for each Method 5G-3 test run. A schematic of a sampling train that conforms to the specifications of Method 5G-3 is shown in Figure 3.9.

Sampling Train Components - All sampling train components should be cleaned with tap water and detergent, followed by rinses with deionized distilled water and acetone, and then allowed to air dry. Do not rinse plastic materials such as Nalgene or polycarbonate materials with acetone. Special attention should be given to the cleaning of the sampling train probe and filter holder assemblies. All glassware should be visually inspected for cracks or breakage. The probe should be sealed at the inlet or tip and checked for leaks at a vacuum of at least 130 mm Hg (5 in. Hg). The probe must be leak free under these conditions.

Pump - The vacuum pump should be serviced as recommended by the manufacturer, or every three months, or upon erratic behavior.

Dryer - Check the components of the drying system to ensure proper operation. If spent silica gel is used, regenerate by heating at 175°C (350°F).

Thermometers - The filter temperature, dryer exit, and dry gas meter thermometers should be compared to a mercury-in-glass reference thermometer at ambient temperature.

Barometer - The field barometer should be compared with a mercury-in-glass barometer or the weather station reading, after a correction for elevation is made, prior to each test run.

Probe Cooling System - Check the components of the optional probe cooling system to ensure proper operation.

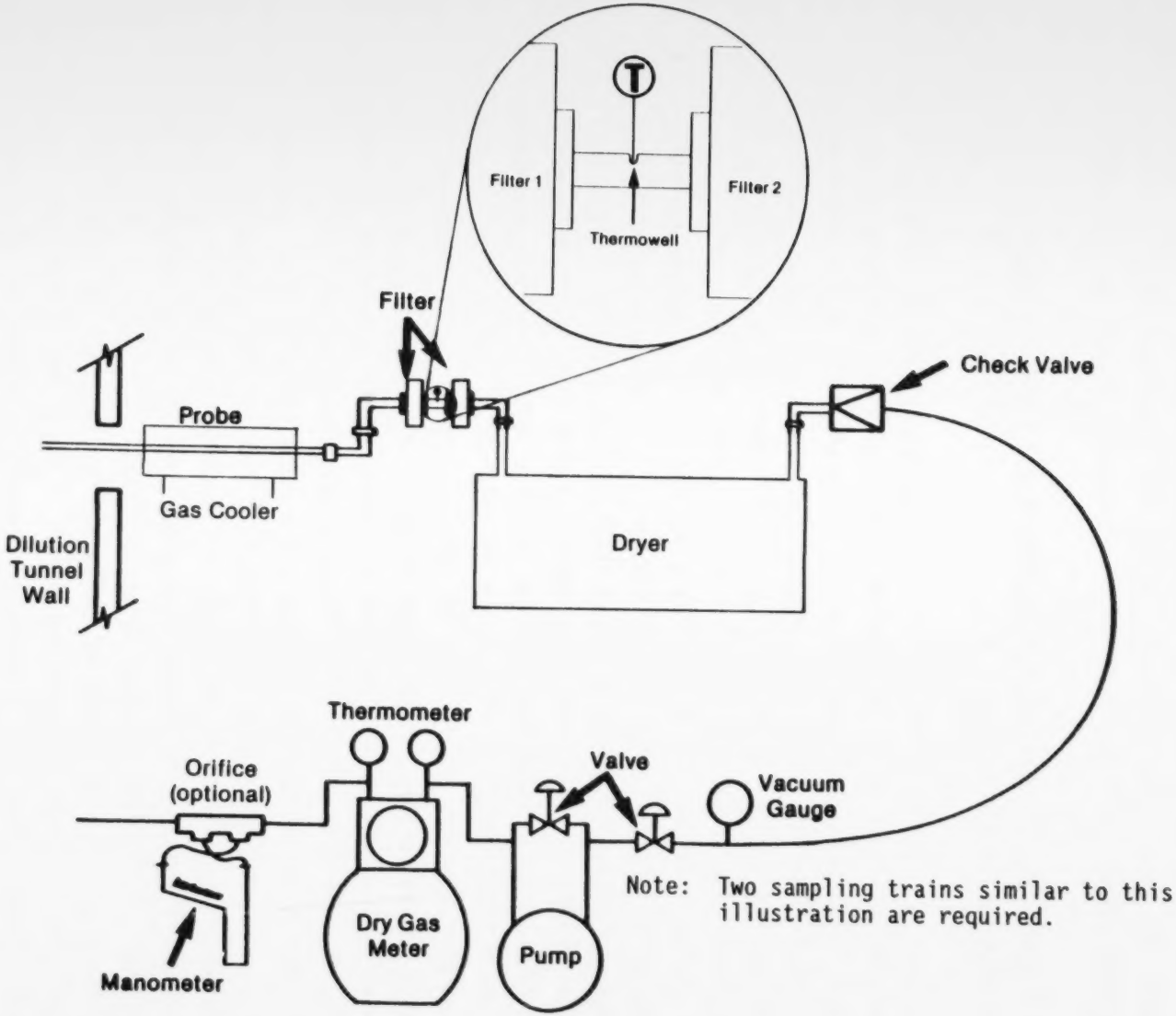

Figure 3.9. Schematic of Method 5G-3 Sampling Train

Rotameters - If rotameters are used for proportional sampling, check to ensure that the rotameter is not damaged and that the flow indicator moves freely. At the sign of erratic behavior, the rotameter should be cleaned according to the maintenance procedure recommended by the manufacturer.

3.5.2 Sampling and Analysis Reagent Checks and Pretest Weight Determinations (Method 5G-3) -

Filters - Check the filters visually against light for irregularities, flaws, and pinhole leaks. Either label the filters on the backside near the edge by using numbering machine ink, or label the petri dishes and keep the filters in their respective dishes except during actual sampling and weighing. Record the filter type, size, and identification number on an analytical data sheet. An example sheet is shown in Figure 3.10.

Desiccate five filters at $20^{\circ} \pm 5.6^{\circ}C$ ($68^{\circ} \pm 10^{\circ}F$) and at ambient pressure for at least 24 h, and then weigh at 2-h intervals until weight changes of <0.5 mg from the previous weighings are achieved. Since total sample catches for Method 5G-3 are typically very low, it is recommended that pretest desiccation and weighing continue until a constant weight of 0.2 mg is attained. Four filters are to collect particulates in the dual Method 5G-3 sampling trains, and the remaining filter is for purposes of quality control blanks. During each weighing, the filter must not be exposed to the laboratory atmosphere for >2 min or to a relative humidity of >50%. An alternative procedure is oven drying the filters at $105^{\circ}C$ ($221^{\circ}F$) for 2 to 3 h followed by desiccation for 2 h and by weighing to a constant weight, as described above. An increase in tare weights with successive weighings is an indication that desiccant should be replaced or that time and relative humidity requirements related to weighings are not met. In such cases, corrective actions should be taken.

A 0.5 g Class F standard weight should be placed on the analytical balance prior to each series of weighings. Either the balance should agree within 0.5 mg of the Class F weight or the balance should be recalibrated.

Date _____ Analyst _____ Run# _____ Desiccator # _____

Indicator/Condition _____ Air Flow/Condition _____ Filter Type _____

PRETEST WEIGHTS

Action	Time/Date	Train A			Train B			Blank Train			Room Conditions		Single Point Balance Check
		Front Filter #	Back Filter #	Probe & Filter Holder Assembly	Front Filter #	Back Filter #	Probe & Filter Holder Assembly	Front Filter #	Back Filter #	Probe & Filter Holder Assembly	Temp.(°F)	Rel. Hum.(%)	

POST-TEST WEIGHTS

Action	Time/Date	Train A			Train B			Blank Train			Room Conditions		Single Point Balance Check
		Front Filter #	Back Filter #	Probe & Filter Holder Assembly	Front Filter #	Back Filter #	Probe & Filter Holder Assembly	Front Filter #	Back Filter #	Probe & Filter Holder Assembly	Temp.(°F)	Rel. Hum.(%)	

Figure 3.10. Data Sheet for Method 5G-3 Gravimetric Determinations

For each filter weighing, record the date and clock time, filter weight, room temperature, relative humidity, and results of the preweighing balance checks on a data sheet similar to Figure 3.10. Record all weights to the nearest 0.1 mg.

Probe - When post-test weight gains are to be determined by weighing the probe and filter holder assembly rather than recovering these components with solvents, the following pretest cleaning and weighing procedures must be performed.

Clean and determine pretest weights for three sampling train probes and filter holder assemblies prior to each test run. Label each probe and filter holder assembly with a unique identification number. Two assemblies are for dual train sampling, and the third probe is used as a quality control blank to check the accuracy of the desiccation and weighing procedure. Rinse each sampling probe and nonplastic filter holder assembly upstream of the front filter with acetone prior to desiccation and determination of pretest run tare weights. Do not use acetone on plastic materials such as Nalgene^R or polycarbonate materials. Use methanol or ethanol rinses on plastic or polycarbonate materials. The purpose of the solvent rinse is removal of moisture that may be trapped inside the probe that will bias the pretest tare weights. Three sampling train probes and front filter holder assemblies should be prepared. Desiccate probe and filter holder assemblies, making sure that airflow is circulated through the probe. Each should be weighed at 2-h intervals until weight changes of <0.5 mg from previous weighings are achieved. A 0.5 g Class F standard weight should be placed on the analytical balance prior to each series of weighings. Either the balance should agree within 0.5 mg of the Class F weight or the balance should be recalibrated. For each weighing, record the date and clock time, probe weight, room temperature, and results of the preweighing balance checks on a sheet similar to Figure 3.10. Record all weights to the nearest 0.1 mg.

Sample Recovery Containers - Method 5G-3 allows testers to weigh filters directly without the use of a petri dish. If filters and probe weights are to be determined directly (without solvent recovery), no sample

recovery containers are required. If used, sample recovery containers should be uniquely identified, cleaned with tap water and detergent, and rinsed with deionized, distilled water and then acetone. After drying at ambient conditions, sample recovery containers should be desiccated at $20^{o} \pm 5.6^{o}C$ ($68^{o} \pm 10^{o}F$) and at ambient pressure for at least 24 h and weighed at 2-h intervals to a constant weight. Pretest weights and supporting information should be recorded on sheets similar to that shown in Figure 3.10. All pretest tare weights should be recorded to the nearest 0.1 mg.

3.5.3 Equipment Identification (Method 5G-3) - After all equipment cleaning and checks are complete, list the identification numbers and/or other unique descriptors for each piece of equipment to be used in the test run. Figure 3.11 contains an example sheet that will assist testers in this task.

3.5.4 Sampling Train Preparation and Assembly (Method 5G-3) - During preparation and assembly of the Method 5G-3 and blank sampling trains, cover all openings where contamination could occur until just prior to assembly or until sampling is about to begin. With tweezers or clean disposable surgical gloves, place one labeled (identified) and weighed filter in each of the filter holders. Be sure that each of the filters is properly centered and the gasket properly placed so as to prevent the sample gas stream from circumventing the filter. Check each of the filters for tears after assembly is completed. Assemble the sampling train as shown in Figure 3.10. Place the filter holders in series with the backup filter holder located 25 to 100 mm (1 to 4 in.) downstream from the primary filter holder. Install a temperature gauge at the exit side of the filter holder so that the sensing tip of the temperature gauge is in direct contact with the sample gas or in a thermowell as shown in Figure 3.9. Alternatively, the sensing tip of the temperature gauge may be installed at the inlet side of the front filter holder. Assemble a sample gas drying system to remove moisture prior to the dry gas meter. Testers have the option of selecting any drying system capable of removing water from the sample gas to less than

Run Number 5

Date 12-31-87 Operator MWH

Wood Heater

Manufacturer: AJAX Stoves

Model: BURNCAT 20

Facility Conditions

Barometric Pressure: 28.34

Air Velocity: < 30 ft/sec

Room Temperature: 73

Relative Humidity: 60%

Wood Heater Conditions

Date Wood Heater Stack Cleaned: 12-20-87

Date Dilution Tunnel Cleaned: 12-21-87

Balance Check: 10 lb class F

Induced Draft Check: ✓

Heater Weight Check: 600 lb

Liquid Seal Check: OK

Wood Load: 18 lb

Pretest Weight: 6 lb

Flow Rate 140 cfm ± 10%: yes

Velocity Factor: OK

Pitot Leak Check

Side A: OK

Side B: OK

Pitot Tube

ID Number: std #2 #1

Type: Std

Identifications

Thermocouples ID No.

Top	TC1
Bottom	TC2
Right Side	TC3
Left Side	TC4
Back	TC5
Catalyst	TC6
Flue	TC7
Room	TC8
Dilution Tunnel	TC9

Sampling Train Leak Check

Train A: .002 cfm @ 5"

Train B: .001 cfm @ 5"

Sampling Train ID Numbers	Train 1	Train 2
Dry Gas Meter	DGM3	DGM4
Rotameter	NA	NA
Probe	P-2	P-3
Filter Front	R-1	R-2
Filter Back	S-4	S-6
Filter Thermocouple	TC10	TC11
Train Exit Thermometer	TC12	TC13

Figure 3.11. Pretest Run Data Sheet (Method 5G-3)

1.5% moisture (volume percent). Install a temperature monitor or wet-bulb/dry-bulb psychrometer to demonstrate that the drying system meets the Method 5G specifications.

3.5.5 Sampling Train Leak Checks - Leak checks are necessary to ensure that the sample has not been biased low by dilution air. A pretest leak check is recommended, but not required. If the tester opts to conduct the pretest leak check, the following procedure should be used.

After the sampling train has been assembled, leak check the train at the sampling site by plugging the probe tip and pulling at least a 130-mm (5-in.) Hg vacuum. Leakage rates >4% of the average sampling rate or 0.00057 m^3/min (0.02 ft^3/min), whichever is less, are unacceptable.

The following leak-check instructions for the sampling train are taken from APTD-0581[2] and APTD-0576.[3] Start the pump with the bypass valve fully open and the coarse-adjust valve closed. Open the coarse-adjust valve and then slowly close the bypass valve until the desired vacuum is reached. Do not reverse the direction of the bypass valve. If the desired vacuum is exceeded, either leak check at this higher vacuum or end the leak check as described below and start over.

When the leak check is complete, first slowly remove the plug from the inlet to the probe and then close the coarse-adjust valve and immediately turn off the vacuum pump. Visually check to be sure that the filter has no tears before beginning the test.

TABLE 3.1. ACTIVITY MATRIX FOR PRETEST PROCEDURES

Activity	Acceptance Limits	Frequency and Method of Measurement	Action if Requirements Are Not Met
Dilution tunnel cleaning and assembly	Cleaned prior to each certification series; assembled as per method specifications	Once prior to each certification test series	Repeat cleaning and assembly procedures
Calibration checks and review of calibration records	Calibration specifications and frequency as described in method	Check prior to each certification test series	Calibrate equipment
Dilution tunnel equipment checks	Inspect Pitot tubes for damage and alignment; clean, check, level, and zero the manometer	Prior to each test run	Clean, repair, or replace
Dilution tunnel measurements	Measure tunnel diameter through two ports	Prior to each test run	Repeat the measurement
Induced draft check	Draft induced by the dilution tunnel should be less than 0.005 in. H_2O	Prior to each test run	Adjust the distance between the dilution tunnel hood and heater stack and repeat the measurement
Smoke capture check	Visually check to ensure that 100% of the smoke is being captured by the dilution tunnel	Prior to each test run during pretest ignition period	Stop the pretest ignition period, adjust the distance between the hood and the heater stacks.

TABLE 3.1. ACTIVITY MATRIX FOR PRETEST PROCEDURES (Continued)

Activity	Acceptance Limits	Frequency and Method of Measurement	Action if Requirements Are Not Met
Smoke capture check (continued)			Repeat the induced draft check and the smoke capture check
Velocity traverse	Perform a velocity traverse using 4 points per traverse; average tunnel flow rate should be within 10% of 4 sm^3/min (140 scfm)	Prior to each test run	Adjust dilution tunnel gas flow rate and repeat traverse
<u>Sampling Train Components</u>			
Probe	1. Probe free of contaminants and constructed of borosilicate glass, quartz, or seamless stainless steel (grade 316 or better)	1. Clean probe internally by brushing with tap water, deionized and distilled water, and acetone; air dry before test. For Method 5G-3 probes should also be desiccated and weighed to a constant weight.	1. Repeat cleaning and assembly procedures
	2. Probe leak free at 130 mm (5 in.) Hg	2. Visually check before test	2. Replace
Impingers or drying system, filter holders, and glass containers	Clean and free of breaks, cracks, leaks, etc.	Clean with detergent, tap water, and deionized distilled water	Repair or discard

TABLE 3.1. ACTIVITY MATRIX FOR PRETEST PROCEDURES (Continued)

Activity	Acceptance Limits	Frequency and Method of Measurement	Action if Requirements Are Not Met
Pump	Capable of maintaining a rate of 0.02-0.03 m^3/min (0.66 to 1.0 ft^3/min) at a pump inlet vacuum of up to 130 mm (5 in.) Hg	Service every 3 months or upon erratic behavior; check oiler jars every certification series	Repair or return to manufacturer
Dry gas meter	Clean and readings within 1% of average calibration factor	Calibrate according to method; check for excess oil	As above
<u>Reagents and Equipment</u>			
Sampling filters	Free of irregularities, flaws, pinhole leaks; desiccate 24 h at 20° ± 5.6°C (68° ± 10°F), or oven dry at 105°C (221°F) 2 to 3 h; constant weight 0.5 mg	Visually check prior to testing; weigh on balance to 0.1 mg prior to use	Replace
Water (Method 5G-2)	Deionized, distilled, conforming to ASTM-D1193-74, Type 3	Run blank evaporations prior to field use to eliminate high solids	Redistill or replace
Stopcock grease	Acetone-insoluble, heat-stable silicone grease	Check label data upon receipt	Replace
Sample recovery acetone (Methods 5G-1 and 5G-2)	Reagent grade, ≤0.001% residue in glass bottles	Run blank evaporations upon receipt	Replace or return to supplier

TABLE 3.1. ACTIVITY MATRIX FOR PRETEST PROCEDURES (Continued)

Activity	Acceptance Limits	Frequency and Method of Measurement	Action if Requirements Are Not Met
Sample recovery dichloromethane (Method 5G-2)	Reagent grade, $\leq$0.001% residue in glass bottles	Run blank evaporations upon receipt	Replace or return to supplier
Sample recovery and analysis containers	Glass beakers and glass or polyethylene petri dishes	Clean, desiccate, and weigh to a constant weight prior to each test run	Replace
Sampling train assembly	Assemble the sampling train as described in Method 5G	Prior to each test run	Repeat assembly procedures
Sampling train leak check	Perform a leak check at 130 mm (5 in.) Hg, leakage rates should be <4% of average sampling rate or <0.0057 m^3/min, whichever is less	Recommended prior to each test run	Check and tighten all fittings and connections; repeat leak check

4.0 TEST RUN OPERATIONS

Test run operations are discussed in two subsections. Section 4.1 describes test run activities and data recording associated with operation of the dilution tunnel during the test run. Dilution tunnel operations are identical for each of the three sampling options. Section 4.2 describes sampling activities and data recording associated with the three Method 5G sampling approaches. Table 4.1 at the end of this section contains an activity matrix that summarizes test run operations.

4.1 Dilution Tunnel Operation and Flow Monitoring

At the conclusion of the pretest run activities (described in Section 3.0), the Pitot tube is in the proper position for making velocity head measurements during the test run. Immediately before starting the test run, check the manometer reading to ensure that the dilution tunnel flow rate is maintained at approximately 4 sm^3/min (140 scfm). Start the test run according to the procedures described in Method 28, subsection 6.4.1. Maintain the tunnel flow rate at the prescribed flow rates throughout the entire test run. Measure and record the dilution tunnel gas temperature and velocity head readings during each 10-min interval. Make adjustments to the dilution tunnel damper or blower as necessary in order to maintain dilution tunnel flow rates within 10% of 4 sm^3/min (140 scfm). Once during each 30-min interval of testing, check to ensure that the Pitot tube is maintained at a position parallel with the duct axis, and check the manometer level and zero by disconnecting the sample lines. If a standard Pitot tube is used, clean the static holes once each hour by "back purging" with pressurized air. Record all Pitot tube checks, cleanings, and measurement data on the sampling data sheet.

4.2 Sampling Train Operation

Just prior to inserting the sampling probe, clean the portholes to minimize the chance of sampling deposited material. Position the probe inlet at the stack centroid and block off the openings around the probe and

porthole to prevent unrepresentative dilution of the gas stream. When the Method 5G-3 sampling option is used, locate the two probes in the dilution tunnel at the same level from two separate sampling ports. Locate the probe inlets within the 50-mm (2-in.)-diameter centroidal area of the dilution tunnel no closer than 25 mm (1 in.) apart. Be careful not to bump the probe into the stack wall when removing or inserting the probe through the porthole. This minimizes the chance of extracting deposited material. If the probe and filter heating option of Method 5G-2 is being used, check to see that these components are at the desired temperatures. Follow the procedure below for sampling. Figure 4.1 shows an example sampling data sheet.

1. Record the initial dry gas meter readings for each sampling system and other data as indicated in Figure 4.1.

2. Turn on the pump and immediately adjust the sample flow rate to 0.015 m^3/min (0.5 cfm) (Methods 5G-1 and 5G-2), or to a rate between 0.003 and 0.015 m^3/min (0.1 and 0.5 cfm) for the Method 5G-3 option. For Method 5G-3, turn on both pumps simultaneously and adjust the sample flow to the desired rate. It is strongly recommended that the highest reasonable flow rate be selected to ensure the collection of a measurable quantity of particulate matter. Note that for Method 5G-3, the filter face velocity shall not exceed 150 mm/s (30 ft/min) during the test run.

3. During the test run, maintain a sample flow rate proportional to the dilution tunnel flow rate (within 10% of the initial proportionality ratio (PR)). Measure and record the tunnel velocity head and dry gas meter readings each 10-min interval. If the dilution tunnel flow is maintained at a constant rate, constant rate sampling ensures proportionality. Calculate proportionality rate for each 10-min period, as described in Section 6.0 of this manual. Alternatively, rotameter readings may be used to maintain proportional sampling with appropriate revisions to the calculation procedures.

4. For Methods 5G-1 and 5G-3 sampling train options, filter holder temperatures should be maintained at $\leq 32^{o}C$ ($90^{o}F$) throughout the test run period. Testers should adjust the probe and filter cooling systems as appropriate to maintain such temperatures. If sampling trains are not equipped with optional probe and filter cooling systems, wrap the filter holders with cold towels and add ice as necessary to maintain the specified temperatures. Do not

Wood Heater _____ Operator _____ Date _____ Run No. _____

Time		Wood Weight	Meter Reading	Rotameter Reading (orifice)	Temperatures				Vacuum Gauge	Velocity		Room Temp	Comments
Clock	Test				Filter	Exit	Inlet Meter	Outlet Meter		ΔP	Tunnel Temp.		

Figure 4.1. Sampling Data Sheet 5G (for 5G-3 information between dark lines is duplicated)

allow filter temperatures to exceed the specified limits. If limits are exceeded, stop the test and repeat the test run. Method 5G-2 front filter and probe must be maintained at temperatures less than 120°C (248°F). Sample gas drying systems should be maintained at temperatures less than 20°C (68°F) during the entire test run. Add ice as necessary. Filter and dryer exit temperatures should be measured and recorded at each 10-min test run interval.

5. Record the clock time, sampling train vacuum, filter temperature, condenser exit temperature, dry gas meter volume, dry gas meter temperature, dilution tunnel temperature, dilution tunnel velocity head, and sample flow indicator (orifice or rotameter reading) for each 10-min test run interval.

6. Periodically during the test run, make adjustments to keep the filter temperature at the proper level. Since the manometer level and zero may drift because of vibrations and temperature changes, make periodic checks during the test run. Make periodic checks on Pitot alignment and clean static holes on standard tubes, as described for dilution tunnel operation (Section 4.1).

7. At the end of the test run, turn off the pump, remove the probe from the stack, and record all final readings.

8. Conduct the mandatory post-test leak check, as described in Section 5.0 of this manual, and record the sampling train leakage rate. Also leak check the Pitot lines by blowing into the downstream leg, sealing the opening, and noting any drop in the pressure gauge reading. Check the upstream leg by drawing a slight vacuum, sealing, and noting the gauges. If there are no leaks, the gauge readings will remain constant. No change in the inclined manometer reading should occur. The Pitot lines must pass this leak check to validate the velocity head data.

TABLE 4.1. ACTIVITY MATRIX FOR TEST RUN OPERATIONS

Activity	Acceptance Limits	Frequency and Method of Measurement	Action if Requirements Are Not Met
Dilution tunnel operation	Maintain dilution tunnel flow rate within 10% of 4 sm^3/min (140 cfm)	Measure velocity head and temperature every 10 min; check Pitot alignment, manometer level, and zero every 30 min; back purge standard Pitot every 1 h	Adjust tunnel flow rate to meet specified limits; adjust manometer level and zero as necessary
Sampling train operation	Maintain filter temperatures on Methods 5G-1 and 5G-3 less than 32°C. Maintain filter temperatures on Method 5G-2 less than 120°C (248°F). Maintain condenser exit temperature less than 20°C (68°F) or 1.5% by volume moisture. Sampling rate for Methods 5G-1 and 5G-2 should be approximately 0.015 m^3/min (0.5 cfm). No more than 10% of PR values should exceed 90% < PR < 110; no PR value should exceed 80% < PR < 120%.	Measure and record temperatures every 10 min; calculate proportionality rate for each 10-min interval	Repeat the test run and take necessary action to maintain temperatures and proportionality rates within specified limits
Data recording	All data recorded correctly	Each 10-min period	Complete data

5.0 POST-TEST PROCEDURES

Section 5.0 describes activities and procedures to be performed at the completion of emission testing. Section 5.1 describes procedures to be performed after each individual test run. These activities include post-test dilution tunnel measurements and equipment checks, sampling train leak checks, recovery of sampling train particulate catch, and analysis (gravimetric determination). Specific procedures for each of the three sampling and analysis options are presented. Section 5.2 describes procedures to be performed at the completion of each certification test series.

5.1 Post-Test Run Procedures

The following subsections describe post-test run procedures and quality assurance checks to be performed at the completion of each test run. Subsection 5.1.1 describes checks and procedures specifically associated with the dilution tunnel and flow measurement equipment. These post-test dilution tunnel procedures are applicable for use with all of the Method 5G sampling and analysis options. Subsections 5.1.2 through 5.1.4 describe post-test run procedures specific to each of the three Method 5G sampling and analysis options.

5.1.1 Post-Test Run Procedures: Dilution Tunnel - When the test run is completed as defined in Method 28, Section 6.4 (when the weight of the test fuel is 0.00 kg) and all final measurements are recorded, remove the sampling train(s). Continue to operate the dilution tunnel at the specified flow rate and perform the following post-test checks. Check the manometer zero and level, and adjust if either has shifted. Check the Pitot tube for obstructions by blowing lightly on one pitot tube leg and then the other. Check the Pitot tube for leaks by blowing into the downstream leg until at least 7.6 cm (3 in.) H_2O velocity pressure registers, seal the opening, and note any drop in the pressure gauge reading. Check the upstream leg by

drawing a minimum of 7.6 cm (3 in.) H_2O vacuum, seal, and note the gauge. The pressure should remain stable for at least 15 s. No change in the inclined manometer reading should occur. A change in the manometer reading indicates a leak in the velocity head measurement system. Record the results of this post-test Pitot tube leak check on the sampling data sheet. If leaks are present, the velocity head data measured during the test run are not valid, and the test run should be repeated.

While maintaining the dilution tunnel flow at the specified rate, insert a calibration orifice plate into the tunnel and conduct a post-test calibration check on the flow measurement system. Using the procedure specified in Section 2.1 of this manual, compare the flow rate determined from the Pitot tube and manometer system to the flow rate calculated using the calibration orifice plate. The Pitot measurement should yield flow rates within 10% of the theoretical orifice plate calculations. If the Pitot/manometer system does not agree within 10%, calculate an adjustment factor and correct the data measured during the test run accordingly. If the two systems differ by more than 50%, the Pitot manometer data are invalid and the test run should be repeated after taking corrective actions.

5.1.2 Post-Test Run Procedures: Method 5G-1 -

5.1.2.1 Leak Check: Method 5G-1 - After removing the sampling train from the dilution tunnel sampling port, perform the mandatory post-test leak check. Procedures for performing a sampling train leak check are described in Section 3.3.5 of this manual. The leak check should be performed at a vacuum of at least 125 mm (5 in.) Hg or the maximum value reached during the sampling run, whichever is greater. If the leakage rate is ≤ 0.00057 m^3/min (0.02 ft^3/min) or 4% of the sampling rate (whichever is less), the results are acceptable and no correction need be applied to the total volume of dry gas metered. If, however, a higher leakage rate is obtained, the tester shall either record the leakage rate and correct the sample volume as shown in Section 6.0 of this manual, or shall void the sampling run. Record the measured leakage rate on the sampling data form.

5.1.2.2 Sampling Train Recovery: Method 5G-1 - After completion of the post-test leak check, separate the probe and filter holder assembly from the condenser/dryer system. Cap the openings to the probe tip and the filter holder outlet, and transfer the assembly to the cleanup area. Separate the probe from the filter holder assembly and cap the openings. Figure 5.1 contains a schematic diagram illustrating the Method 5G-1 sampling train recovery and analysis procedures. It is recommended that sample train recovery begin as soon as possible after completing the test run. Treat the samples as follows:

Container No. 1 - Carefully remove the filter from the primary filter holder and place it in its identified (labeled) petri dish container. Use a pair of tweezers and/or clean disposable surgical gloves to handle the filter. Carefully transfer to the petri dish any particulate matter and/or filter fibers which adhere to the filter holder gasket by using a dry nylon bristle brush and/or a sharp-edged blade. Seal the container. In cases where it is impractical to remove all filter fibers from the filter holders gasket, transfer the gasket to a petri dish and desiccate as described for the filters.

Container No. 2 - Remove the filter from the second filter holder by using the same procedures as described above.

Note: The two filters may be placed in the same container for desiccation and weighing. Use the sum of the filter tare weights to determine the sample mass collected.

Container No. 3 - Wipe off external particulate matter near the tip of the probe and cover the tip to prevent losing or gaining particulate matter. Taking care to see that dust on the outside of the probe or other exterior surfaces does not get into the sample, quantitatively recover particulate matter or any condensate from the probe and filter holders by washing and brushing these components with acetone and placing the wash in a labeled (No. 3) glass container. At least three cycles of brushing and rinsing are necessary. Perform the rinses as follows:

Rinse the inside surfaces with acetone while rotating the probe so that all inside surfaces are thoroughly wetted, tilt the probe, and squirt acetone into its upper end. Let the acetone drain from the lower end into

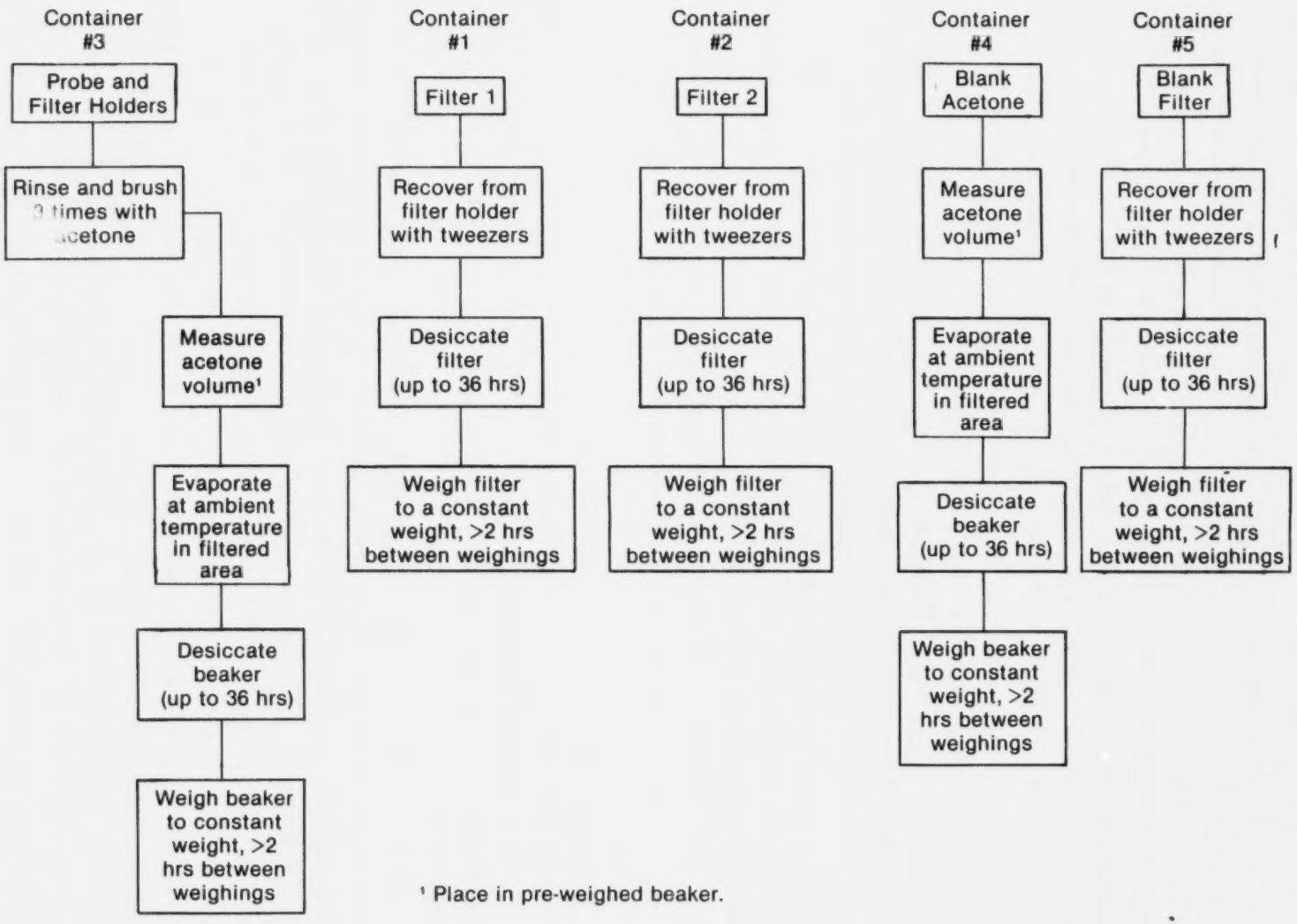

¹ Place in pre-weighed beaker.

Figure 5-1. Recovery and Analysis Scheme for Method 5G-1

the sample container. The tester may use a glass funnel to aid in transferring liquid washes to the container. Hold the probe in an inclined position, and squirt acetone into the upper end as the probe brush is being pushed with a twisting action through the probe. Hold the sample container underneath the lower end of the probe and catch any acetone and particulate matter that is brushed from the probe. Run the brush through the probe three times or more while squirting with acetone. Continue the brushing and rinsing procedure until no visible sample matter is carried out with the acetone rinse and when visual inspection shows none remaining inside the probe. With stainless steel or other metal probes, run the brush through in the prescribed manner at least six times, since metal probes have small crevices in which sample matter can be entrapped. Rinse the brush with acetone and quantitatively collect these washings in the sample container. After the brushing, make a final rinse of the probe as described above.

Between sampling runs, keep brushes clean and protected from contamination.

After all acetone washings and particulate matter have been collected in the sample containers, tighten the lids on the sample containers so that the acetone will not leak out when transferred to the laboratory weighing area. Label the contents clearly to identify contents.

Container No. 4 - Save 200 mL of the acetone used for sample train cleanup as an acetone blank. Take this acetone directly from the wash bottle being used and place it in a glass sample container labeled "acetone blank."

Container No. 5 - Remove the quality control filter from the blank sampling train by using the same procedures as described for Container No. 1.

5.1.2.3 Analysis: Method 5G-1 - Determine the particulate catch in each of the sampling train components as shown in Figure 5.1. Use the same analytical balance for determining tare weight and final sample weights. Perform all post-test weighings by using the same procedures as described in Section 3.0 of this manual (pretest weighings). For each weighing, record the date, the clock time, the measured weight, room temperature, relative

humidity, and the results of the preweighing analytical balance checks. Record all weights to the nearest 0.1 mg. Handle each sample container as follows:

Containers No. 1 and No. 2 - Leave the contents in the sample containers or transfer the filters and loose particles to tared glass weighing dishes. Desiccate for no more than 36 h before the initial weighing, weigh to a constant weight, and report the results to the nearest 0.1 mg. For purposes of this section, the term "constant weight" means a difference of no more than 0.5 mg or 1% of total sample weight (less tare weight), whichever is greater, between two consecutive weighings, with no less than 2 h between weighings. If filter holder gaskets were desiccated and weighed because of extensive sticking of filter fibers, weigh to a constant weight and follow by brushing and cleaning with acetone. Desiccate the clean gaskets and weigh to a constant weight. The difference in gasket weights should be included in the post-test filter weights when calculating particulate catch.

Container No. 3 - Measure the liquid in this container either volumetrically to within 1 mL or gravimetrically to within 0.5 g. Transfer the contents to a tared 250-mL or smaller beaker and evaporate to dryness at ambient temperature and pressure. Desiccate and weigh to a constant weight. Report the results to the nearest 0.1 mg.

Container No. 4 - Measure acetone in this container either volumetrically or gravimetrically. Transfer the acetone to a tared 250-mL or smaller beaker and evaporate to dryness at ambient temperature and pressure. Desiccate and weigh to a constant weight. Report the results to the nearest 0.1 mg.

Container No. 5 - Desiccate and weigh the blank filter to constant weight as described for Containers No. 1 and No. 2. Report the results to the nearest 0.1 mg. A difference between the pretest and post-test blank filter weights of more than 0.2 mg indicates problems with sample recovery, desiccation, and weighing techniques. Testers should reexamine train recovery and analysis procedures to identify the source of the error.

5.1.3 Post-Test Run Procedures: Method 5G-2 -

5.1.3.1 Leak Check: Method 5G-2 - After removing the sampling train from the dilution tunnel sampling port, perform the mandatory post-test leak check. Procedures for performing this leak check are described in detail in subsection 3.4.5 of this manual. Record the leakage rate and, if necessary, correct the sample volume according to the Method 5G-1 procedures described in subsection 5.1.2 above.

5.1.3.2 Sampling Train Recovery: Method 5G-2 - After completion of the post-test leak check, allow the probe to cool. When the probe can be safely handled, wipe off all external particulate matter near the tip of the probe and cover the tip to prevent losing or gaining particulate matter. Do not cap off the probe tip tightly while the sampling train is cooling down as this would create a vacuum in the filter holder resulting in water being drawn from the impingers into the filter holder. Remove the exit tubing from the last impinger and cap the impinger. Transfer the probe and filter-impinger assembly to the cleanup area. Separate the probe, filter holder assemblies, and impingers. It is recommended that sample train recovery begin as soon as possible after completing the test run. Figure 5.2 contains a schematic diagram illustrating the Method 5G-2 sampling rain recovery and analysis procedures. Treat the samples as described below.

Container No. 1 - Carefully remove the filter from the front filter holder and place it in its identified petri dish container. Use a pair of tweezers and/or clean disposable surgical gloves to handle the filter. Carefully transfer to the petri dish any particulate matter and/or filter fibers which adhere to the filter holder gasket by using a dry nylon bristle brush and/or a sharp-edged blade. Seal and label the container. In cases where it is impractical to remove all filter fibers from the filter holder gasket, transfer the gasket to a petri dish and desiccate as described for the filter.

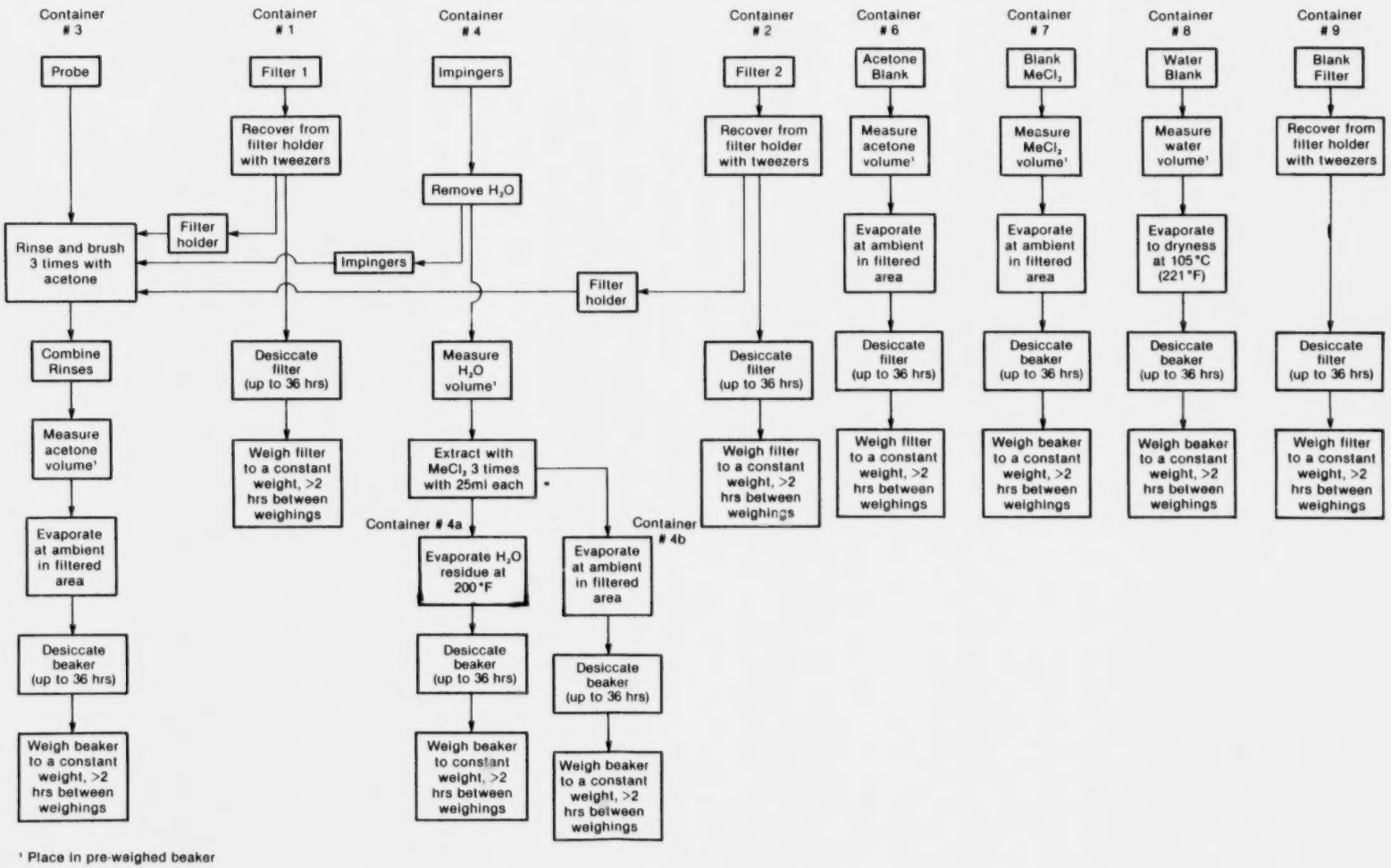

Figure 5-2. Recovery Chart and Analysis Scheme for Method 5G-2

Container No. 2 - Remove the filter from the back filter holder using the same procedures as described above.

Container No. 3 - Wipe off external particulate matter near the tip of the probe and cover the tip to prevent losing or gaining particulate matter. Taking care to see that dust on the outside of the probe or other exterior surfaces does not get into the sample, quantitatively recover particulate matter or any condensate from the probe and filter holders by washing and brushing these components with acetone and placing the wash in a labeled (No. 3) glass container. At least three cycles of brushing and rinsing are necessary. Perform the rinses as described below.

Rinse the inside surfaces with acetone while rotating the probe so that all inside surfaces are thoroughly wetted, tilt the probe, and squirt acetone into its upper end. Let the acetone drain from the lower end into the sample container. The tester may use a glass funnel to aid in transferring liquid washes to the container. Hold the probe in an inclined position, and squirt acetone into the upper end as the probe brush is being pushed with a twisting action through the probe. Hold the sample container underneath the lower end of the probe and catch any acetone and particulate matter that is brushed from the probe. Run the brush through the probe three times or more while squirting with acetone. Continue the brushing and rinsing procedure until no visible sample matter is carried out with the acetone rinse and when visual inspection shows none remaining inside the probe. With stainless steel or other metal probes, run the brush through in the prescribed manner at least six times, since metal probes have small crevices in which sample matter can be entrapped. Rinse the brush with acetone and quantitatively collect these washings in the sample container. After the brushing, make a final rinse of the probe as described above.

Between sampling runs, keep brushes clean and protected from contamination.

After all acetone washings and particulate matter have been collected in the sample containers, tighten the lids on the sample containers so that the acetone will not leak out when transferred to the laboratory weighing area. Label the contents clearly to identify contents.

Container No. 4 - Treat the impingers as follows: Measure the liquid which is in the first three impingers to within 1 mL by using a graduated cylinder or by weighing it to within 0.5 g by using a balance (if one is available). Record the volume or weight of liquid present. This information is required to calculate the moisture content of the effluent gas.

Transfer the water from the first, second, and third impingers to a glass container. Tighten the lid on the sample container so that water will not leak out. Rinse impingers and graduated cylinder, if used, with acetone three times or more. Avoid direct contact between the acetone and any stopcock grease when rinsing impingers. Add these rinse solutions to sample Container No. 3.

Container No. 5 (Optional) - Weighing of silica gel is an optional procedure for the determination of tunnel gas moisture content. Testers have the option of measuring moisture content or using a default value of 4% moisture by volume. If testers opt to use the default, the spent silica gel need not be weighed. If testers opt to measure moisture content, the following recovery procedures are applicable: Transfer the silica gel from the fourth impinger to its original container and seal. A funnel may make it easier to pour the silica gel without spilling. A rubber policeman may be used as an aid in removing the silica gel from the impinger. It is not necessary to remove the small amount of dust particles that may adhere to the impinger wall and are difficult to remove. Since the gain in weight is to be used for moisture calculations, do not use any water or other liquids to transfer the silica gel.

Container No. 6 - Save 200 mL of the acetone used for sampling train cleanup as an acetone blank. Take this acetone directly from the wash bottle being used and place it in a glass sample container labeled "acetone blank."

Container No. 7 - Measure 75 mL of dichloromethane used for impinger water extraction and place in a glass sample container labeled "dichloromethane blank."

Container No. 8 - Measure 200 mL of distilled deionized water from the same lot used for filling the impingers. Place the water in a sample container labeled "water blank."

Container No. 9 - Remove the quality control filter from the blank sampling train using the same procedures as described for Container No. 1.

5.1.3.3 Analysis: Method 5G-2 - Determine the particulate catch in each of the sampling train components as shown in Figure 5.2. Use the same analytical balance for determining tare weight and final sample weights. Perform all post-test weighings by using the same procedures as described in Section 3.0 of this manual (pretest weighings). For each weighing, record the date, the clock time, the measured weight, room temperature, relative humidity, and the results of the preweighing analytical balance checks. Record all weights to the nearest 0.1 mg. Handle each sample container as described below.

Containers No. 1 and No. 2 (Filters) - Leave the contents in the shipping container or transfer both of the filters and any loose particulate matter from the sample container to a tared glass weighing dish. Desiccate for no more than 36 h. Weigh to a constant weight and report the results to the nearest 0.1 mg. For purposes of this section, the term "constant weight" means a difference of no more than 0.5 mg or 1% of total weight less tare weight, whichever is greater, between two consecutive weighings, with no less than 2 h between weighings. If filter holder gaskets were desiccated and weighed because of extensive sticking of filter fibers, weigh to a constant weight and follow by brushing and cleaning with acetone. Desiccate the clean gaskets and weigh to a constant weight. The difference in gasket weights should be included in the post-test filter weights when calculating particulate catch.

Container No. 3 (Probe Filter Holder and Impinger Rinses) - Measure the liquid in this container either volumetrically to within 1 mL or gravimetrically to within 0.5 g. Transfer the contents to a tared 250-mL or smaller beaker and evaporate to dryness at ambient temperature and pressure. Desiccate and weigh to a constant weight. Report the results to the nearest 0.1 mg.

Container Nos. 4a and 4b (Impinger Contents) - If testers opt to measure dilution tunnel gas moisture directly, determine the amount of liquid in this container volumetrically to within 1 mL or gravimetrically to within 0.5 g. Transfer the contents to a 500-mL or larger separatory funnel. Rinse the container with water and add to the separatory funnel. Add 25 mL of dichloromethane to the separatory funnel, stopper, and vigorously shake 1 min. Let separate and transfer the dichloromethane (lower layer) into a tared beaker or evaporating dish. Repeat twice more. It is necessary to rinse the Container No. 4 with dichloromethane. This rinse is added to the impinger extract container. Label the impinger extract Container No. 4b. Transfer the remaining water from the separatory funnel to a tared beaker (labeled Container No. 4a) or evaporating dish, and evaporate to dryness at 105°C (221°F). Desiccate and weigh to a constant weight. Evaporate the combined impinger water extracts at ambient temperature and pressure. Desiccate and weigh to a constant weight. Report both results to the nearest 0.1 mg.

Container No. 5 (Silica Gel) - If the moisture content of dilution tunnel gases is being measured, weigh the spent silica gel and record the weight to the nearest 0.5 g.

Container No. 6 (Acetone Blank) - Measure acetone in this container either volumetrically or gravimetrically. Transfer the acetone to a tared 250-mL or smaller beaker and evaporate to dryness at ambient temperature and pressure. Desiccate and weigh to a constant weight. Report the results to the nearest 0.1 mg.

Container No. 7 (Dichloromethane Blank) - Transfer the dichloromethane to a tared beaker and evaporate to dryness at ambient temperature and pressure. Desiccate and weigh to a constant weight. Report the results to the nearest 0.1 mg.

Container No. 8 (Water Blank) - Transfer the water to a tared 250-mL beaker and evaporate to dryness at 105°C (221°F). Desiccate and weigh to a constant weight. Report the results to the nearest 0.1 mg.

Container No. 9 - Desiccate and weigh the blank filter to a constant weight as described for Containers No. 1 and No. 2. Report the results to the nearest 0.1 mg. A difference between the pretest and post-test blank

filter weights of more than 0.2 mg indicates problems with sample recovery, desiccation, and weighing techniques. Testers should reexamine train recovery and analysis procedures to identify the source or error.

5.1.4 Post-Test Run Procedures: Method 5G-3 -

5.1.4.1 Leak Check: Method 5G-3 - After removing the sampling trains from the dilution tunnel sampling ports, perform the mandatory post-test leak check on each train. Procedures for performing this leak check are described in detail in subsection 3.5.5 of this manual. Record the measured leakage rates on the sampling data form and, if necessary, correct the sample volumes according to the procedures described in subsection 5.1.2 of this manual for Method 5G-1.

5.1.4.2 Sampling Train Recovery: Method 5G-3 - After completion of the post-test leak checks, separate the probe and filter holder assemblies from their respective condenser-dryer systems. Wipe the probe free of external particulate matter. Make sure that each of the sampling trains is uniquely identified to relate the particulate catch to the metered volume and dilution tunnel port location. Cap the openings to the probe tips and filter holder outlets, and transfer the assemblies to the cleanup area. Recover and analyze the samples from the two sampling trains separately. Figure 5.3 contains a schematic diagram illustrating the Method 5G-3 sampling train recovery and analysis procedures.

For Method 5G-3, the probe and filter holder assembly may be weighed without sample recovery in order to determine the sample weight gains. If testers opt to determine particulate catch by direct weighing techniques instead of solvent recovery, the train recovery procedure involves only removal of the filters. Sampling train filters and quality control blanks should be recovered as described in subsection 5.1.2 of this manual for Method 5G-1. Special attention is necessary to recover all filter fibers and pieces that may have adhered to the filter holder gasket. Alternatively, if testers opt to recover nonplastic sampling train probe and

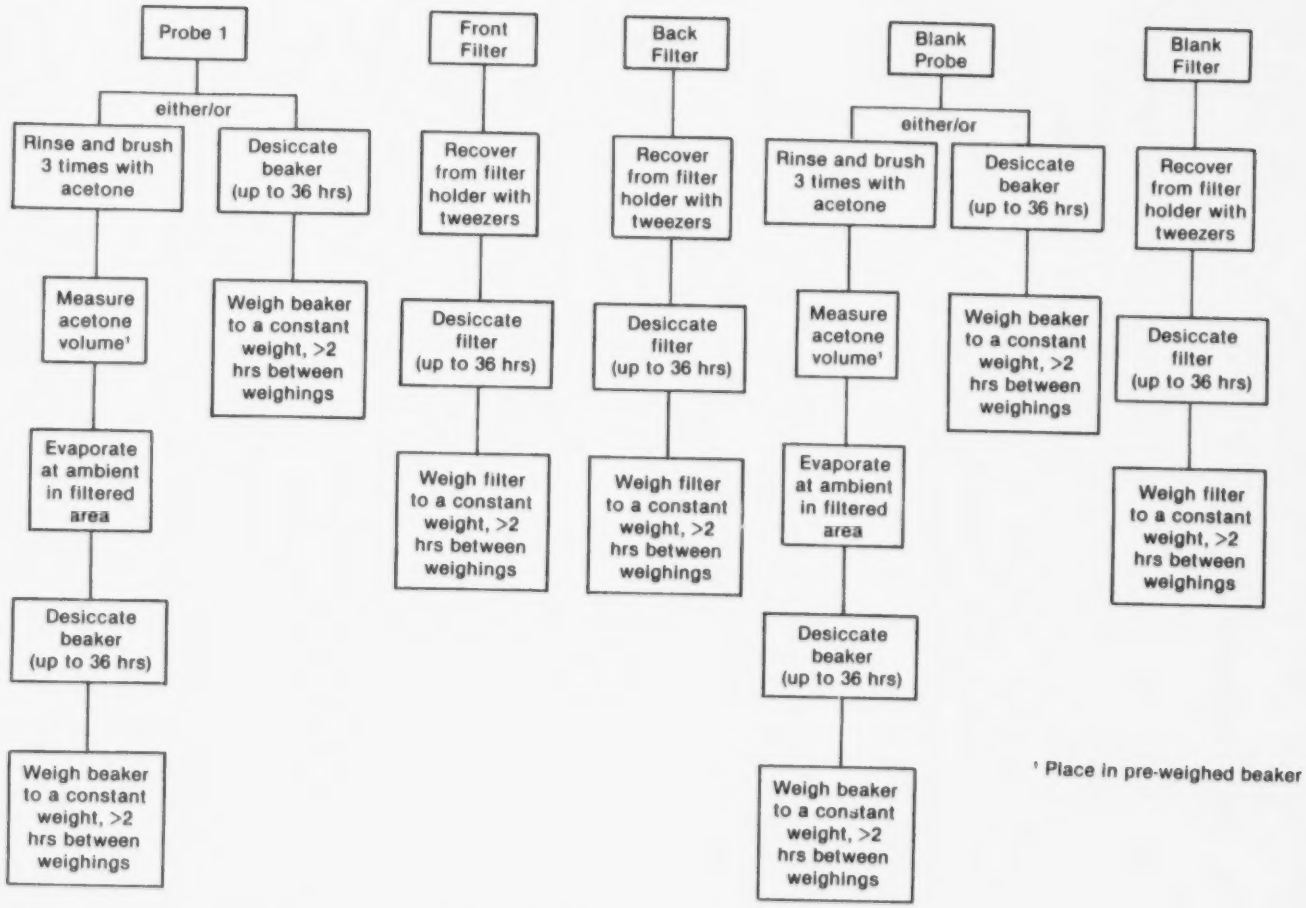

Note: These procedures should be performed for each sampling train.

Figure 5-3. Recovery and Analysis Scheme for Method 5G-3

filter holder components by using acetone, recovery procedures should be performed as described for Method 5G-1.

5.1.4.3 Analysis: Method 5G-3 - The following description of particulate mass determination is based on the direct weighing alternative. If testers opt to recover train components, analysis should be performed as described in subsection 5.1.2 of this manual for Method 5G-1. Figure 5.3 shows a schematic diagram illustrating the two Method 5G-3 sampling train recovery and analysis options. Although components for only one train are shown in the diagram, each of the dual trains should be recovered according to the illustrated scheme.

Use the same analytical balance for determining tare weight and final sample weights. Perform all post-test weighings by using the same procedures as described in subsection 3.5.2 of this manual (pretest weighings). For each weighing, record the date, clock time, the measured weight, room temperature, relative humidity, and the results of the analytical balance checks. Record all weights to the nearest 0.1 mg. Handle each component as described below.

Filters - Desiccate the filters and loose particulate matter for a period no longer than 36 h. Weigh to a constant weight and report the results to the nearest 0.1 mg. For purposes of this section, the term "constant weight" means a difference of no more than 0.5 mg or 1% of the total final weight less tare weight, whichever is greater, between two consecutive weighings, with no less than 2 h between weighings. Filters may be weighed directly without a petri dish.

Probe and Filter Holder Assembly - After removing the filters from the filter holder assemblies, reassemble the filter holder assemblies and transfer the train components to the desiccator. Uncap the probe and filter holder assemblies and position so that dry air will flow through these openings. Desiccate no more than 36 h and weigh to a constant weight. Report the results to the nearest 0.1 mg. Note: The filter holder section between the front and second filter need not be weighed.

Blank Probe and Filter - Desiccate and weigh the blank filter, the probe, and filter holder assemblies as described above. Report the results to the nearest 0.1 mg. A difference between the pretest and post-test quality control blanks of more than 0.2 mg indicates problems with sample recovery, desiccation, and/or pretest and post-test weighings. If filter blanks are not within the 0.2-mg specification, weigh the filter holder gasket, then clean with acetone, desiccate, and reweigh to determine if the source of error is attributed to poor recovery or filter fibers from the gasket material. If the source of error cannot be identified and corrected, the data should be considered invalid and the test run should be repeated.

5.2 Post-Certification Series Procedures

A certification test series is defined by the wood heater regulation as being a series of at least four test runs conducted for certification or audit purposes and which meets specific burn rate requirements. Two post-certification series checks are required on the metering system(s).

5.2.1 Post-Certification Series Metering System Calibration Check - After each certification test series, the calibration of the metering system should be checked by performing three calibration runs at a single, intermediate flow rate (based on the previous test), with the vacuum set at the maximum value reached during the certification series. To adjust the vacuum, insert a valve between the wet test meter and the inlet of the metering system. Calculate the average value of the dry gas meter calibration factor. If the value has changed by more than 5%, recalibrate the meter over the full operational range, as previously detailed in Section 2.0 of this manual.

5.2.2 Acceptable Variation in Calibration - If the dry gas meter coefficient values obtained before and after a test series differ by more than 5%, the test series should be voided or calculations for the test series should be performed by using whichever meter coefficient value (i.e., before or after) gives the lower value of total sample volume.

5.2.3 Leak Check of Metering System - That portion of the sampling train from the pump to the orifice meter should be leak checked prior to initial use and after each certification or audit test. Leakage after the pump will result in less volume being recorded than is actually sampled. The following procedure should be followed: Close the main valve on the meter box. Insert a one-hole rubber stopper with rubber tubing attached into the orifice exhaust pipe. Disconnect and vent the low side of the orifice manometer. Close off the low side orifice tap. Pressurize the system to 13 to 18 cm (5 to 7 in.) water column by blowing into the rubber tubing. Pinch off the tubing and observe the manometer for 1 min. A loss of pressure on the manometer indicates a leak in the meter box; leaks, if present, must be corrected.

Similar leak checks should be conducted for other types of metering systems (i.e., without orifice meters). Results of the post-certification series metering system leak check should be reported in the certification test series report.

TABLE 5.1. ACTIVITY MATRIX FOR POST-TEST PROCEDURES

Activity	Acceptance Limits	Frequency and Method of Measurement	Action if Requirements Are Not Met
Dilution tunnel post-test run checks	Manometer should be level and zero properly adjusted; Pitot tube should be unobstructed; pitot tube should be leak free	After completion of each test run	If obstructions in Pitot lines were noted, or manometer level or zero has shifted, perform a post-test run traverse. If Pitot tube is not leak free, repeat the test run.
Sampling train leak check	Leakage rate must be $\leq 0.00057\ m^3/min$ ($0.02\ ft^3/min$) or 4% of sampling rate (whichever is less)	After completion of each test run	Either correct the sample volume or repeat the test run
Sampling train recovery and analysis	Recover and analyze the sampling train components as described, without introducing contamination	After completion of each test run	Repeat the test run
Blank sampling train recovery and analysis	Recover and analyze the quality control blank filter and probe assembly (Method 5G-3) as described. Pretest and post-test weights should be within 0.2 mg.	After completion of each test run	Identify source of recovery and weighing error and correct when possible. Otherwise, repeat the test run.

TABLE 5.1. ACTIVITY MATRIX FOR POST-TEST PROCEDURES (Continued)

Activity	Acceptance Limits	Frequency and Method of Measurement	Action if Requirements Are Not Met
Metering system calibration check	Calibration factor from the average of three runs should be within 5% of the pretest calibration factor	After completion of each certification test series	Recalibrate the metering system. Test series should be voided or calculations performed by using the smallest coefficient value.
Metering system leak check	Leak check at 13-18 cm (5-7 in.) H_2O. Observe manometer for 1 min. System should be leak free.	After completion of each certification series	Repair the metering system and repeat the test series

6.0 CALCULATIONS

Calculation errors due to mathematical mistakes can be a large part of total system error. Therefore, each set of calculations should be repeated or spot-checked by a team member other than the one who performed them originally. If a difference greater than a typical round-off error is detected, the calculations should be checked step by step until the source of error is found and corrected. A computer program should reduce or eliminate calculation errors. For each of the parameters to be calculated, at least one calculation should be performed manually to verify the accuracy of computer algorithms. If a standardized computer program is used, the original data entry should be checked; if differences are observed, a new computer run should be made. Table 6.1 at the end of this section summarizes the quality assurance activities for calculations.

Carry out calculations, retaining at least one significant digit figure beyond that of the acquired data. Round off after final calculations to two significant digits for each run or sample in accordance with the ASTM E380-84[7] procedures.

Subsections 6.2 through 6.10 describe calculations required for the Method 5G-1 sampling option. Subsection 6.11 describes calculations that are unique to the Method 5G-2 sampling option. Subsection 6.12 describes those calculations that are unique to the Method 5G-3 option. Subsection 6.13 contains examples showing step-by-step procedures for each of the required calculations.

6.1 Nomenclature

The following terms defined and listed alphabetically herein are to be used in calculating dry gas volume, solvent wash blanks, total particulate weights, concentrations, emission rates, and proportional rate variations for each test run.

A = Cross-sectional area of dilution tunnel, m^2, (ft^2).

B_{ws} = Water vapor in the gas stream, proportion by volume (assumed to be 0.04).

C_p = Pitot tube coefficient (use 0.99 for standard Pitot tube; use 0.84 for S-type Pitot tube).

c_s = Concentration of particulate matter in stack gas, dry basis, corrected to standard conditions, g/dsm^3 (g/dscf).

E = Particulate emission rate, g/h.

F_p = Adjustment factor for Pitot tube placement.

K_p = Pitot tube constant:

$$34.97 \text{ m/s} \left[\frac{(\text{g/g-mol})\ (\text{mm Hg})}{(\text{K})\ (\text{mm } H_2O)} \right]^{1/2} \text{ for metric units}$$

$$85.49 \text{ ft/s} \left[\frac{(\text{lb/lb-mol})\ (\text{in. Hg})}{(^{o}\text{R})\ (\text{in. } H_2O)} \right]^{1/2} \text{ for English units}$$

L_a = Maximum acceptable leakage rate for either a pretest or post-test leak check, equal to 0.00057 m^3/min (0.02 cfm) or 4% of the average sampling rate, whichever is less.

L_p = Leakage rate observed during the post-test leak check, m^3/min (cfm).

m_a = Mass of residue of acetone blank after evaporation, mg.

m_{aw} = Mass of residue from acetone wash after evaporation, mg.

m_n = Total amount of particulate matter collected, mg.

M_s = Molecular weight of dilution tunnel gas, wet basis, g/g-mol (lb/lb-mol) (may be assumed to be 28.56).

M_w = Molecular weight of water, 18.0 g/g-mol (18.0 lb/lb-mol).

P_{bar} = Barometric pressure at the sample site, mm Hg (in. Hg).

PR = Percent of proportional sampling rate.

P_s = Absolute gas pressure in dilution tunnel, mm Hg (in. Hg).

P_{std} = Standard absolute pressure, 760 mm Hg (29.92 in. Hg).

Q_{sd} = Average gas flow rate in dilution tunnel, calculated as in Method 2, Equation 2-10, dsm^3/h (dscf/h).

T_m = Absolute average dry gas meter temperature, K (^{o}R).

T_{mi} = Absolute average dry gas meter temperature during each 10-min interval, i, of the test run, K (^{o}R).

T_s = Absolute average gas temperature in the dilution tunnel, K (^oR).

T_{si} = Absolute average gas temperature in the dilution tunnel during each 10-min interval, i, of the test run, K (^oR).

T_{std} = Standard absolute temperature, 293^oK (528^oR).

V_a = Volume of acetone blank, mL.

V_{aw} = Volume of acetone used in wash, mL.

V_m = Volume of gas sample as measured by dry gas meter, dm^3 (dcf).

V_{mi} = Volume of gas sample as measured by dry gas meter during each 10-min interval, i, of the test run, dm^3 (dcf).

$V_{m(std)}$ = Volume of gas sample measured by the dry gas meter, corrected to standard conditions, dsm^3 (dscf).

v_s = Average gas velocity in dilution tunnel, calculated by Method 2, Equation 2-9, m/s (ft/s).

v_{si} = Average gas velocity in dilution tunnel during each 10-min interval, i, of the test run, calculated by Method 2, Equation 2-9, m/s (ft/s).

Y = Dry gas meter calibration factor.

ΔH = Average pressure differential across the orifice meter, if used, mm H_2O (in. H_2O).

$(\sqrt{\Delta p})_{avg}$ = Average square root of each individual velocity head (Δp) measured during the test run. Note: Not the square root of the average Δp.

θ = Total sampling time, min.

10 = 10 min, length of first sampling period.

13.6 = Specific gravity of mercury.

100 = Conversion to percent.

6.2 Dry Gas Volume

Correct the sample volume measured by the dry gas meter to standard conditions (20^oC, 760 mm Hg or 68^oF, 29.92 in. Hg) by using Equation 6.1. (If no orifice meter is used in the sampling train, assume ΔH = 0, or measure static pressure at dry gas meter outlet).

$$V_{m(std)} = V_m Y \left(\frac{T_{std}}{T_m} \right) \left[\frac{P_{bar} + \frac{\Delta H}{13.6}}{P_{std}} \right] = K_1 V_m Y \left[\frac{P_{bar} + (\Delta H/13.6)}{T_m} \right] \qquad \text{Eq. 6.1}$$

where:

K_1 = 0.3858 ^{o}K/mm Hg for metric units.
= 17.64 ^{o}R/in. Hg for English units.

Note: If L_p exceeds L_a, Equation 6.1 must be modified as follows: Replace V_m in Equation 6.1 with the expression:

$$[V_m - (L_p - L_a)\ \theta]$$

6.3 Solvent Wash Blank Correction

$$m_{aw} = \frac{m_a\ V_{aw}}{V_a} \qquad \text{Eq. 6.2}$$

6.4 Total Particulate Weight

Determine the total particulate catch, m_n (in mg), from the sum of the weights obtained from containers 1, 2, and 3, less the acetone blank.

6.5 Particulate Concentration

$$c_s = (0.001\ g/mg)\ [m_n/V_{m(std)}] \qquad \text{Eq. 6.3}$$

6.6 Dilution Tunnel Velocity

$$v_s = K_p\ C_p\ (\sqrt{\Delta p})_{avg} \sqrt{\frac{T_s\ (avg)}{P_s\ M_s}} \qquad \text{Eq. 6.4}$$

NOTE: See Figure 6.13 for calculation of v_s if point of average velocity is not used.

6.7 Average Dilution Tunnel Gas Flow Rate

$$Q_{sd} = 3600\ (1-B_{ws})\ v_s\ A \left(\frac{T_{std}}{T_{s(avg)}}\right)\left(\frac{P_s}{P_{std}}\right) \qquad \text{Eq. 6.5}$$

6.8 Particulate Emission Rate

$$E = c_s\ Q_{sd} \qquad \text{Eq. 6.6}$$

Note: Particulate emission rate results produced using the Method 5G-1 and Method 5G-3 sampling train options should be adjusted for reporting purposes by the following methods adjustment factor:

$$E_{adj} = 1.82\ (E)^{0.83} \qquad \text{Eq. 6.7}$$

6.9 Proportional Rate Variation

Calculate proportional rate (PR) for each 10-minute interval, i, of the test run.

$$PR = \frac{\theta\ (V_{mi}\ v_s\ T_m\ T_{si})}{10\ (V_m\ v_{si}\ T_s\ T_{mi})} \times 100 \qquad \text{Eq. 6.8}$$

Alternate calculation procedures for proportional rate variation may be used if other sample flow rate data (e.g., orifice flow meters or rotameters) are monitored to maintain proportional sampling rates. The proportional rate variations shall be calculated for each 10-min interval by comparing the stack flow to sample flow ratio for each 10-min interval to the average stack to sample flow ratio for the test run. Proportional rate variation may be calculated for intervals shorter than 10 min with appropriate re[illegible]ns to Equation 6.8.

6.10 Acceptable Results

If no more than 10% of the PR values for all the intervals exceed 90% <PR <110%, and if no PR value for any interval exceeds 80% <PR <120%, the results are acceptable. If the PR values for the test run are judged to be unacceptable, report the test run emission results, but do not include the results in calculating the weighted average emission rate, and repeat the test run.

6.11 Calculations Unique to Sampling Method 5G-2

Calculations described in Subsections 6.2 through 6.10 of this manual are applicable to the Method 5G-2 option except in the following cases.

If sampling Method 5G-2 was used and a filter change was necessary during the test run, replace V_m in Equation 6.1 with:

$$V_m - (L_1 - L_a)\,\theta_1$$

and substitute for leakage rates (L_1) which exceed L_a. See Method 5H, Section 7.0.

The solvent wash blank calculation (Equation 6.2) should be performed for impinger water and for each of the solvents used in recovery of the Method 5G-2 sampling train. Blanks should be calculated for acetone, dichloromethane, and impinger water.

Total particulate catch (m_n) for the Method 5G-2 train should be determined by adding the weights obtained from the filters, the probe rinse, the impinger water, and the dichloromethane impinger extract, less the acetone, dichloromethane, and impinger water blanks.

When using Method 5G-2, no emission rate adjustment factor (Equation 6.7) is required.

6.12 Calculations Unique to Sampling Method 5G-3

Calculations described in Subsections 6.2 through 6.8 of this manual are applicable to the Method 5G-3 option except in the following cases.

Total particulate catch (m_n) should be determined by adding the weight gain measured for the filters and the sampling train probe assembly. Acetone blank residues should be subtracted from the train catch only if testers use acetone to recover probe catch (as opposed to direct probe weighing).

Adjusted emission rates (Equation 6.7) should be calculated for each of the dual sampling trains separately. The two emission rates shall not differ from their average by more than 7.5% or 7.5% of the weighted average emission rate limit in the applicable standard, whichever is greater. If this specification is not met, the results are unacceptable. Report the results, but do not include the results in calculating the weighted average emission rate. Repeat the test run until acceptable results are achieved, report the average emission rate for the acceptable test run, and use the average in calculating the weighted average emission rate.

6.13 Example Calculations

Example calculations are shown in Figures 6.1 through 6.13 to assist in performing Method 5G calculations. The following is a listing of each of the examples by figure number.

Figure	Example Calculation
6.1	Volume of Gas Sample Corrected to Dry Standard Conditions
6.2	Total Amount of Particulate Matter Collected (Method 5G-1)
6.3	Total Amount of Particulate Matter Collected (Method 5G-2)
6.4	Total Amount of Particulate Matter Collected (Method 5G-3)
6.5	Particulate Concentration

Figure	Example Calculation
6.6	Average Dilution Tunnel Gas Velocity
6.7	Average Dilution Tunnel Gas Flow Rate
6.8	Particulate Emission Rate
6.9	Adjusted Particulate Matter Emission Rate
6.10	Filter Face Velocity Check (Method 5G-3)
6.11	Dual Train Precision (Method 5G-3)
6.12	Dry Gas Meter Calibration Factor
6.13	Adjustment Factor for Alternative Pitot Tube Placement

VOLUME OF GAS SAMPLE CORRECTED TO DRY STANDARD CONDITIONS

$\left(V_{m(std)}\right)$

Equation Used

$$V_{m(std)} = K_1 V_m Y \left(\frac{P_{bar} + \left(\frac{\Delta H}{13.6}\right)}{T_m} \right)$$

Nomenclature

$V_{m(std)}$ = Volume of gas sample measured by the dry gas meter, corrected to standard conditions, $dscm^3$ (dscf)

K_1 = 0.3858 ^oK/mm Hg for metric units

= 17.64 ^oR/in. Hg for English units

V_m = Volume of gas sample as measured by the dry gas meter, dm^3 (dcf)

Y = Dry gas meter calibration factor

P_{bar} = Barometric pressure at the sampling site, mm Hg (in. Hg)

ΔH = Average pressure differential across the orifice meter (if used), mm H_2O (in. H_2O)

T_m = Absolute average dry gas meter temperature, ^oK (^oR)

Sample Calculation

$$V_{m(std)} = (17.64^oR/\text{in. Hg}) \times (61.588 \text{ dcf}) \times (1.003) \times \frac{\left(29.23 \text{ in. Hg} + \dfrac{2.31 \text{ in. } H_2O}{13.6\left(\dfrac{\text{in. } H_2O}{\text{in. Hg}}\right)}\right)}{542^oR}$$

$V_{m(std)}$ = 59.11 dscf

Figure 6.1. Volume of Gas Sample Corrected to Dry Standard Conditions

TOTAL AMOUNT OF PARTICULATE MATTER COLLECTED (5G-1)

(m_n)

Equation Used

$$m_n = F_1 + F_2 + R - \left(\frac{m_a V_{aw}}{V_a}\right)$$

Nomenclature

m_n = Total amount of particulate matter collected, mg

F_1 = Particulate matter collected on front filter, mg

F_2 = Particulate matter collected on second filter, mg

R = Residue from evaporated probe and filter holder rinses, mg

m_a = Mass of residue of acetone solvent blank after evaporation, mg

V_{aw} = Volume of acetone used in probe and filter holder rinses, ml

V_a = Volume of acetone blank, ml

Sample Calculation

$$m_n = 25.3 \text{ mg} + 6.1 \text{ mg} + 12.3 \text{ mg} - \left(\frac{(0.2 \text{ mg})(250 \text{ ml})}{(50 \text{ ml})}\right)$$

$$m_n = 42.7 \text{ mg}$$

Figure 6.2. Total Amount of Particulate Matter Collected (Method 5G-1)

TOTAL AMOUNT OF PARTICULATE MATTER COLLECTED (5G-2 and 5H)

(m_n)

Equation Used

$$m_n = F_1 + F_2 + R + I_{ex} + I_w - \left(\frac{m_a V_{aw}}{V_a}\right) - \left(\frac{m_{dcm} V_{dcmw}}{V_{dcm}}\right) - \left(\frac{m_w V_{iw}}{V_w}\right)$$

Nomenclature

= Total amount of particulate matter collected, mg

$_1$ = Particulate matter collected on front filter, mg

F_2 = Particulate matter collected on second filter, mg

R = Residue from evaporated probe and filter holder rinses, mg

I_{ex} = Weight of residue from evaporated impinger water extract, mg

I_w = Weight of residue from evaporated impinger water, mg

m_a = Mass of residue of acetone solvent blank after evaporation, mg

V_{aw} = Volume of acetone used in probe and filter holder rinses, ml

V_a = Volume of acetone blank, ml

m_{dcm} = Mass of residue in dichloromethane solvent blank after evaporation, mg

V_{dcmw} = Volume of dichloromethane used in impinger rinses and impinger extractions, ml

V_{dcm} = Volume of dichloromethane blank, ml

m_w = Mass of residue in water blank after evaporation, mg

V_{iw} = Volume of water placed in train impingers, ml

V_w = Volume of water blank, ml

Figure 6.3. Total Amount of Particulate Matter Collected (Method 5G-2)

Sample Calculation

$$m_n = 75.1\ \text{mg} + 13.2\ \text{mg} + 56.4\ \text{mg} + 35\ \text{mg} + 23\ \text{mg} - \left(\frac{(0.2\ \text{mg})(250\ \text{ml})}{(50\ \text{ml})}\right) - \left(\frac{(0.1)(100\ \text{ml})}{(75\ \text{ml})}\right) - \left(\frac{(0.1\ \text{mg})(200\ \text{ml})}{(200\ \text{ml})}\right)$$

$$m_n = 201.47\ \text{mg}$$

Figure 6.3. (Continued)

TOTAL AMOUNT OF PARTICULATE MATTER COLLECTED (5G-3)

(m_n)

Equation Used

$$m_n = F_1 + F_2 + \Delta PF$$

Nomenclature

m_n = Total amount of particulate matter collected, mg

F_1 = Particulate matter collected on front filter, mg

F_2 = Particulate matter collected on second filter, mg

ΔPF = Post-test weight gain of probe and filter holder assembly, mg

Sample Calculation

m_n = 25.3 mg + 5.6 mg + 17.1 mg

m_n = 48.0 mg

Figure 6.4. Total Amount of Particulate Matter Collected (Method 5G-3)

PARTICULATE CONCENTRATION (C_s)

Equation Used

$$C_s = (0.001\ g/mg) \times (m_n/V_{m(std)})$$

Nomenclature

C_s = Concentration of particulate matter in stack gas or dilution tunnel, dry basis, corrected to standard conditions g/dsm^3 (g/dscf)

m_n = Total amount of particulate matter collected in the sampling train, mg

$V_{m(std)}$ = Volume of gas sample measured corrected to dry standard conditions, dsm^3 (dscf)

Sample Calculation

$$C_s = (0.001\ g/mg) \times \frac{52.4\ mg}{12.23\ dscf}$$

$$C_s = 0.00428\ g/dscf$$

Figure 6.5. Particulate Concentration

AVERAGE DILUTION TUNNEL GAS VELOCITY (v_s)

Equation Used

$$v_s = K_p\, C_p (\sqrt{\Delta_p})_{avg} \sqrt{\frac{T_{s(avg)}}{P_s M_s}}$$

Nomenclature

v_s = Average dilution tunnel gas velocity m/s (ft/s)

K_p = Pitot tube constant;

$$34.97 \frac{m}{sec} \left[\frac{(g/g\text{-mole})(mm\ Hg)}{(^oK)\ (mm\ H_2O)} \right]^{1/2} \text{ for the metric units}$$

$$85.49 \frac{ft}{sec} \left[\frac{(lb/lb\text{-mole})(in.\ Hg)}{(^oR)\ (in.\ H_2O)} \right]^{1/2} \text{ for English units}$$

C_p = Pitot tube coefficient (use 0.99 for standard pitot tube, 0.84 may be used for S-type tubes constructed according to Method 2 specifications)

$(\sqrt{\Delta p})_{avg}$ = Average square root of each individual velocity head (Δp)

Δp = Velocity head dilution tunnel gas, mm H_2O (in. H_2O)

P_{bar} = Barometric pressure at measurement site, mm H_2O (in. Hg)

P_g = Stack static pressure, mm Hg (in. Hg)

P_s = Absolute dilution tunnel gas pressure, mm Hg (in. Hg), or $P_{bar} + P_g$

M_s = Molecular weight of dilution tunnel gas, wet basis, g/g-mole (lb/lb-mole) (may be assumed to be 28.56)

t_s = Dilution tunnel temperature, ^oC (^oF)

T_s = Absolute dilution tunnel temperature, K (^oR), or 273 + t_s for metric units, 460 + t_s for English units

Figure 6.6. Average Dilution Tunnel Gas Velocity

Sample Calculation

$$v_s = 85.49 \frac{ft}{sec} \left[\frac{(lb/lb\text{-}mole)(in.\ Hg)}{(^oR)\ (in.\ H_2O)}\right]^{1/2} \times 0.99$$

$$\times\ 0.200\ [in.\ H_2O]^{1/2} \times \sqrt{\frac{550^oR}{(29.32\ in.\ Hg)\ (28.56\ lb/lb\text{-}mole)}}$$

$$v_s = 85.49 \frac{ft}{sec} \left[\frac{(lb/lb\text{-}mole)(in.\ Hg)}{(^oR)\ (in.\ H_2O)}\right]^{1/2} \times 0.99 \times 0.200\ [in.\ H_2O]^{1/2}$$

$$\times\ 0.810 \left[\frac{^oR}{(in.\ Hg)\ (lb/lb\text{-}mole)}\right]^{1/2}$$

$$v_s = 13.711\ ft/sec$$

Figure 6.6. (Continued)

AVERAGE DILUTION TUNNEL GAS FLOW RATE (Q_{sd})

Equation Used

$$Q_{sd} = 3600(1 - B_{ws})\, v_s\, A \left(\frac{T_{std}}{T_{s(avg)}}\right)\left(\frac{P_s}{P_{std}}\right)$$

Nomenclature

Q_{sd} = Total gas flow rate corrected to dry standard conditions, dsm^3/hr (dscf/hr)

3600 = Conversion factor seconds per hour

B_{ws} = Water vapor in the dilution tunnel stream, proportion by volume (may be assumed to be 4%)

v_s = Average dilution tunnel gas velocity, m/s (ft/s)

A = Cross-sectional area of dilution tunnel, m^2 (ft^2)

T_{std} = Standard absolute temperature, 293^oK (528^oR)

$(T_s)_{avg}$ = Average absolute dilution tunnel temperature, ^oK (^oR), or $273 + t_s$ for metric units; $460 + t_s$ for English units

t_s = Dilution tunnel temperature, ^oC (^oF)

P_s = Absolute dilution tunnel gas pressure, mm Hg (in. Hg), or $P_{bar} + P_g$

P_{bar} = Barometric pressure at measurement site, mm Hg (in. Hg)

P_g = Dilution tunnel static pressure, mm Hg (in. Hg)

P_{std} = Standard absolute pressure, 760 mm Hg (29.92 in. Hg)

Sample Calculation

$$Q_{sd} = 3600\ \frac{sec}{hr}\ (1-0.04) \times 14.05\ \frac{ft}{sec} \times 0.1963\ ft^2 \times \left(\frac{528^oR}{543^oR}\right) \times \left(\frac{29.95\ in.\ Hg}{29.92\ in.\ Hg}\right)$$

Q_{sd} = 9277.686 dscf/hr

Figure 6.7. Average Dilution Tunnel Gas Flow Rate

PARTICULATE EMISSION RATE, (E)

Equation Used

$$E = C_s Q_{sd}$$

Nomenclature

E = Particulate emission rate, g/hr

C_s = Concentration of particulate matter in stack gas or dilution tunnel gas, dry basis corrected to standard conditions, g/dscm^3, (g/dscf)

Q_{sd} = Total gas flow rate, dry basis corrected to standard conditions, dsm^3/hr (dscf/hr)

Sample Calculation

E = (0.1770 g/dscf) (19.77 dscf/hr)

E = 3.50 g/hr

Figure 6.8. Particulate Emission Rate

ADJUSTED PM EMISSION RATE, (E_{adj})

Equation Used

$$E_{adj} = 1.82(E)^{0.83}$$

Nomenclature

E_{adj} = Method 5G emission rate adjusted to Method 5H equivalent

E = Particulate emission rate measured using 5G-1 or 5G-3, g/hr (lb/hr)

Sample Calculation

$E_{adj} = 1.82\ (2.42\ g/hr)^{0.83}$

$E_{adj} = 3.79\ g/hr$

NOTE: 2.42 is raised to the 0.83 power before multiplying by 1.82.

Figure 6.9. Adjusted Particulate Matter Emission Rate

FILTER FACE VELOCITY CHECK

Equation Used

$$FV_{max} = \frac{V_{mL}}{10} \times \frac{1}{F_A}$$

Nomenclature

FV_{max} = Maximum filter face velocity during the test run, m/min (ft/min)

V_{mL} = Largest 10 minute interval metered gas volume value recorded during the test run, dm^3 (dcf)

F_A = Filter area exposed to gas sample during train operation, m^2 (ft^2)

Sample Calculation

V_{mL} = 0.0920 dm^3 or 3.25 ft^3

F_A = 47 mm filter diameter, exposed filter area = 37 mm diameter

= $\pi(18.5\ mm)^2$

= 1075.2 mm^2 or 0.0116 ft^2

$$FV_{max} = \frac{0.0920\ dm^3}{10\ min} \times \frac{1}{1075.2 \times 10^{-3}\ m^2} = \frac{8.56\ m}{min}$$

or

$$FV_{max} = \frac{3.25\ ft^3}{10\ min} \times \frac{1}{0.0116\ ft^2} = 28.02\ ft/min$$

Figure 6.10. Filter Face Velocity Check (Method 5G-3)

DUAL TRAIN PRECISION (5G-3)

(Δ%)

Equation Used

$$\Delta\% = \frac{[E_{adj}(A) - E_{adj}(B)]}{[E_{adj}(A) + E_{adj}(B)]} \times 100$$

or, if $[E_{adj}(A) + E_{adj}(B)] / 2 <$ the applicable standard:

$$\Delta\% = \frac{[E_{adj}(A) - E_{adj}(B)]}{2 \times \text{Applicable Weighted Emission Limit}} \times 100$$

Nomenclature

E_{adj} (Train A) = Method 5G emission rate measured by sampling train A adjusted to Method 5H equivalent, g/hr

E_{adj} (Train B) = Method 5G emission rate measured by sampling train B adjusted to Method 5H equivalent, g/hr

Δ% = Percent different in dual train emission rates, %; this must be $\leq$7.5%

Sample Calculation (for applicable standard = 8.5 g/hr)

$$\Delta\% = \frac{(6.67 \text{ g/hr} - 5.67 \text{ g/hr})}{(6.67 \text{ g/hr} + 5.67 \text{ g/hr})} \times 100$$

Δ% = 8.17%

but, since $[E_{adj}(A) + E_{adj}(B)] / 2 <$8.5 g/hr:

$$\Delta\% = \frac{(6.67 \text{ g/hr} - 5.67 \text{ g/hr})}{8.5 \text{ g/hr} \times 2} \times 100$$

Δ% = 5.88%

Figure 6.11. Dual Train Precision (Method 5G-3)

– DRY GAS METER CALIBRATION FACTOR (Y)

Equation Used

$$Y = \frac{Y_1 + Y_2 + Y_3 + Y_4 + Y_5 + Y_6}{6}$$

where,

$$Y_i = \frac{V_w P_b T_m}{V_d \left(P_b + \frac{\Delta H}{13.6}\right) T_w}$$

Nomenclature

Y = Average ratio of accuracy of wet test meter to dry gas meter for all six runs

Y_i = Ratio of accuracy of wet test meter to dry gas meter for the "i^{th} run

V_w = Gas volume passing through the wet test meter, m^3 (ft^3)

P_b = Barometric pressure, mm Hg (in. Hg)

T_m = Absolute average temperature of the gas in the dry gas meter, ^oK (^oR)

V_d = Gas volume passing through the dry gas meter, m^3 (ft^3)

ΔH = Pressure differential across orifice, mm H_2O (in. H_2O)

T_w = Absolute average temperature of the gas in the wet test meter, ^oK (^oR)

NOTE: Assumes saturated vapor for both meters.

Sample Calculation

$$Y_i = \frac{(10\ ft^3)(28.72\ in.\ Hg)(79^o + 460^o\ R)}{(10.12\ ft^3)[28.72\ in.\ Hg + (0.5/13.6)](531.5^oR)}$$

$Y_i = 1.001$

Figure 6.12. Dry Gas Meter Calibration Factor

ADJUSTMENT FACTOR FOR ALTERNATIVE PITOT TUBE PLACEMENT (F_p)

A pitot tube adjustment factor is used when the pitot is located at any point other than the point of average velocity as determined in the pretest run dilution tunnel traverse.

Equation Used

$$F_p = \frac{[(\sqrt{\Delta p})_{avg}]}{[\overline{\sqrt{\Delta p}_{(sp')}}]}$$

Nomenclature

$(\sqrt{\Delta p})_{avg}$ = Average of the square roots of velocity head measurements during pretest traverse, mm H_2O (in. H_2O)

$\Delta p_{(sp')}$ = Velocity head measurement at the point selected for pitot tube placement during pretest traverse, mm H_2O (in. H_2O)

$[\overline{\sqrt{\Delta p}_{(sp')}}]$ = Average of the square roots of the velocity heads measured at the point selected for pitot tube placement

F_p = Adjustment factor for correcting Δp values when point of average tunnel velocity is not selected for pitot tube placement

Factor Application

$$v_s = K_p C_p F_p \times \overline{\sqrt{\Delta p}_{(sp)}} \quad \frac{T_s}{P_s M_s}$$

$[\overline{\sqrt{\Delta p}_{(sp)}}]$ = Average of the square roots of Δp value during testing at the point selected for pitot tube placement

Figure 6.13. Adjustment Factor for Alternative Pitot Tube Placement

TABLE 6.1. ACTIVITY MATRIX FOR CALCULATIONS

Apparatus	Acceptance Limits	Frequency and Method of Measurement	Action if Requirements Are Not Met
Analysis data form	All data and calculations given on the form	Visual check	Fill in the missing data values
Calculations	Difference between checked and original calculations not in excess of round-off error; at least one decimal figure beyond that of acquired data retained	Repeat all calculations starting with raw data for hand calculations for one test run per certification series	Correct any errors and repeat calculations

7.0 MAINTENANCE

The normal use of emission testing equipment subjects it to corrosive gases, extremes in temperature, vibrations, and shocks. Keeping the equipment in good operating order over an extended period of time requires a knowledge of the equipment and a program of routine maintenance which is performed quarterly. In addition to the quarterly maintenance, a yearly cleaning of all equipment is recommended. Maintenance procedures for the various components are summarized in Table 7.1 at the end of this section.

The following procedures are not required, but are recommended to increase the reliability of the equipment.

7.1 Pumps

In the present commercial sample train, several types of pumps are used. The two most common are the fiber vane pump with in-line oiler and the diaphragm pump. The fiber vane pump requires a periodic check of the oiler jar. Its contents should be translucent at the time of filling and at each periodic check. It is recommended that the oil be changed if it is not translucent. Use the oil specified by the manufacturer. If none is specified, use SAE 10, nondetergent oil. Whenever the fiber vane pump starts to run erratically, or during the yearly disassembly, the head should be removed and the fiber vanes should be changed. Erratic operation of the diaphragm pump is normally due either to a bad diaphragm, which will cause leakage, or to malfunction of the valves. The valves should be cleaned annually during the complete disassembly of the train.

7.2 Dry Gas Meters

The dry gas meter should be checked for excess oil or corrosion of the components by removing the top plate every three months. If the top plate is removed, the meter should be leak checked and recalibrated. The meter should be disassembled, and all components should be cleaned and checked

when (1) the rotation of the dials is erratic, (2) the meter will not calibrate properly over the required flow rate range, or (3) during yearly maintenance. Most public utility gas companies will clean and calibrate dry gas meters.

7.3 Sample Train

All remaining sample train components should be checked visually every three months and disassembled completely and cleaned or replaced yearly. Many of the items, such as quick disconnects, should be replaced when damaged rather than checked periodically. Greenburg-Smith impinger tips should be checked for restrictions semiannually.

7.4 Inclined Manometer

The fluid in the inclined thermometer should be changed whenever there is discoloration or visible matter in the fluid and during the yearly disassembly. The entire assembly should be cleaned with soap and water to allow the free flow of fluid before the fluid is replaced. No other routine maintenance is required since the inclined manometers will be leak checked during the leak check of the Pitot tube.

7.5 Analytical Balance

The analytical balance should be inspected and cleaned quarterly. The balance should be disassembled and cleaned whenever a five-point calibration is performed (i.e., semiannually) or when a one-point pretest calibration fails.

7.6 Rotameters

Rotameters should be cleaned with soap and water if they become plugged or their responses become erratic.

7.7 Thermocouples

Thermocouple junctions should be checked regularly for corrosion and contacts cleaned or replaced. Frayed insulation should be repaired or the thermocouple replaced.

7.8 Probe Coolers

Probe coolers should be periodically cleaned.

7.9 Filter Frits

Filter frits should be cleaned periodically with a soft brush to ensure free flow during sampling.

TABLE 7.1. ACTIVITY MATRIX FOR EQUIPMENT MAINTENANCE CHECKS

Apparatus	Acceptance Limits	Frequency and Method of Measurement	Action if Requirements Are Not Met
General routine maintenance	No erratic behavior	Routine maintenance quarterly; disassemble and clean yearly	Replace parts as needed
Fiber vane pump	Leak free; required flow	Periodic check of oil jar; remove head and change fiber vanes	Replace as needed
Diaphragm pump	Leak free valves functioning properly; required flow	Clean valves during yearly disassembly	Replace when leaking or when running erratically
Dry gas meter	No excess oil, corrosion, or erratic dial rotation	Check every 3 months for excess oil or corrosion by removing the top plate; check valves and diaphragm when meter dial runs erratically or when meter will not calibrate	Replace parts as needed, or replace meter
Inclined manometer	No discoloration of or visible matter in the fluid	Check periodically; change fluid during yearly disassembly; clean with soap and water	Replace parts as needed
Sample train	No damage or leaks	Visually check every 3 months; completely disassemble and clean or replace yearly	If failure noted, use another entire control console or sample box

TABLE 7.1. ACTIVITY MATRIX FOR EQUIPMENT MAINTENANCE CHECKS (Continued)

Apparatus	Acceptance Limits	Frequency and Method of Measurement	Action if Requirements Are Not Met
Pitot tube	No dents, corrosion, or other damage	Visually check before and after each test run	Use another Pitot tube or clean, repair, and recalibrate
Analytical balance	Clean, meets calibration requirements	Clean quarterly; disassemble and clean annually and when calibration is required	Replace parts as needed or replace balance
Rotameter	No erratic operation; clean	Visually inspect before and after each test run; clean with soap and water	Replace unit if cleaning fails to correct erratic response
Thermocouples	No frayed wires; clean junction contacts	Check before each test series	Clean contacts; replace damaged parts

8.0 AUDITING PROCEDURE

An audit is an independent assessment of data quality. Independence is achieved if the individual(s) performing the audit and their standards and equipment are different from those used by the regular testing team. Routine quality assurance checks by a testing team are necessary in generation of good quality data, but they are not part of the auditing procedure. Figure 8.1 is a suggested checklist for the auditor. Table 8.1 at the end of this section summarizes the quality assurance activities for auditing.

Two specific performance audits are recommended:

1. audit of the measurement phase of Method 5G; and
2. audit of data processing.

In addition to these performance audits, a systems audit may be conducted as specified by the quality assurance coordinator. The performance audits and the systems audit are described in Sections 8.1 and 8.2, respectively.

8.1 Performance Audits

Performance audits quantitatively evaluate the quality of data produced by the total measurement system (sample collection, sample analysis, and data processing). It is recommended that these audits be performed by the testing facility once during every wood heater certification test series. A test series for enforcement is at least four runs at one source.

8.1.1 Audit of Measurement Systems - A performance audit should be performed on the geometric standards for the type S and standard Pitot tubes, as described in Section 2.1.

Yes	No	Comment	Operation
			PRE-SAMPLING PREPARATION
✓			1. Knowledge of process conditions
	✓	No static p measured	2. Calibration of pertinent equipment: in particular, the dry gas meter, manometer, pitot tube cleaned, and static pressure measured
			ON-SITE MEASUREMENTS
✓			3. Sample train assembly
✓			4. Pretest leak check of train
	✓	All Above	5. Velocity traverse procedure
✓			6. Post-test leak check
	✓	dropped filter #2	7. Sample recovery and integrity
✓			8. Recording of pertinent process information during sample collection
			POST-SAMPLING
✓			9. Check of analytical balance
✓			10. Use of acceptable detection blanks in correcting field sample results
✓			11. Calculation procedure/check
✓			12. Dry gas meter calibration check

GENERAL COMMENTS

More care in analysis Needed.

Figure 8.1. Method 5 Checklist to be Used by Auditors

8.1.2 Audit of Data Processing - Calculation errors are prevalent in Method 5G. Data processing errors can be determined by auditing the data recorded on the laboratory forms. The original and audit (check) calculations should agree within round-off error; if not, all of the remaining data should be checked. The data processing may also be audited by providing the testing team with specific data sets (exactly as would occur in wood heater testing), by requesting that the data calculation be completed, and then checking the results against the known answer. This audit is useful in checking both computer programs and manual methods of data processing.

8.2 Systems Audit

A systems audit is an on-site qualitative inspection and review of the total measurement system (sample collection, data processing, etc.). Initially, a systems audit is recommended for each woodstove emissions test series, defined here as a series of at least four test runs at one wood heater source. After the test team gains experience with the method, the frequency of audit may be reduced (e.g., once for every four wood heater emissions test series).

The auditor should have extensive background experience in source sampling, specifically with the measurement system being audited. The functions of the auditor are summarized in the following:

1. Inform the testing team of the results of pretest audits, specifying any area(s) that need special attention or improvement.

2. Observe procedures and techniques of the testing team during sample collection.

3. Check/verify records of apparatus calibration checks from previous source tests, where applicable.

4. Record the results of the audit and forward them with comments to the team management so that appropriate corrective action may be initiated.

While on site, the auditor observes the testing team's overall performance including the following specific operations:

1. Determining dilution tunnel diameter and selecting the position of traverse points.

2. Marking the Pitot tube to ensure measurements at the correct traverse points.

3. Aligning the Pitot tube properly along its roll and pitch axes throughout the velocity traverse.

4. Clearing the Pitot tube frequently, before and after each test run.

5. Leak checking the sample train before and after each test run.

6. Post-test series dry gas meter calibration check.

7. Cleaning and/or desiccation of apparatus before test run.

8. Handling blank filters and rinses exactly as sample filters and rinses.

9. Calibrating analytical balance in an identical fashion before pretest weighings and before post-test weighings.

10. Recovery of the sample from the sampling train: removal of the filters, washing the probe and filter holders, and desiccation of the sample collecting apparatus.

TABLE 8.1. ACTIVITY MATRIX FOR AUDITING PROCEDURE

Apparatus	Acceptance Limits	Frequency and Method of Measurement	Action if Requirements Are Not Met
Data processing errors	Original and check calculations agree within round-off error	Frequency: Once during every enforcement test* Method: Independent calculations of recorded data	Check and correct all data for the audit period represented by the sampled data
Systems audit - observance of technique	Operational technique as described in this section of the Handbook	Frequency: Once during every enforcement test* until experience is gained, then every fourth test Method: Observation of techniques assisted by audit checklist, Figure 8.1	Explain to team their deviations from recommended techniques and note on Figure 8.1

*As defined here, a enforcement test comprises a series of four or more test runs for the purpose of woodstove certification. Source tests for purposes other than enforcement (e.g., research and development) may be audited at a lower frequency.

9.0 RECOMMENDED STANDARDS FOR ESTABLISHING TRACEABILITY

To achieve data of desired quality, two considerations are necessary: (1) the measurement process must be in a state of statistical control at the time of the measurement and (2) the systematic errors, when combined with the random variation (errors of measurement), must result in a small uncertainty.

To ensure good quality data, it is necessary to perform quality control checks and independent audits of the measurement process; to document these checks and audits by recording the results, as appropriate; and to use materials, instruments, and measurement procedures that can be traced to an appropriate standard of reference.

Working calibration standards should be traceable to standards that are considered to be primary. Primary standards recommended for establishing traceability in Method 5G are:

1. Calibrate Pitot tubes against a standard Pitot tube with a known coefficient obtained from the National Bureau of Standards or standard measurement which has been shown to have given acceptable coefficients.

2. Compare the temperature monitors to an ASTM reference thermometer.

3. Class S weights traceable to NBS specifications are necessary for the analytical balance calibration.

4. A wet test meter calibrated according to the procedures described in Section 2.5 of this manual can be used to calibrate the dry gas meter standard. Alternatively, a spirometer or other liquid volume verification procedure may be used.

10.0 REFERENCE METHOD

This section contains both Method 5G and Method 5H as published in the Federal Register, Volume 53, Number 38 (February 26, 1988), p. 5884, et seq. Method 5H is used as a reference when using the Method 5G-2 sampling and analysis option.

Appendix A—Reference Methods

Method 5G—Determination of Particulate Emissions From Wood Heaters From a Dilution Tunnel Sampling Location

1. Applicability and Principle

1.1 Applicability. This method is applicable for the determination of particulate matter emissions from wood heaters.

1.2 Principle. Particulate matter is withdrawn proportionally at a single point from a total collection hood and sampling tunnel that combines the wood heater exhaust with ambient dilution air. The particulate matter is collected on two glass fiber filters in series. The filters are maintained at a temperature of no greater than 32 °C (90 °F). The particulate mass is determined gravimetrically after removal of uncombined water.

There are three sampling train approaches described in this method: (1) One dual-filter dry sampling train operated at about 0.015 m^3/min. (2) One dual-filter plus impingers sampling train operated at about 0.015 m^3/min. and (3) two dual-filter dry sampling trains operated simultaneously at any flow

rate. Options (2) and (3) are referenced in Section 7 of this method. The dual-filter sampling train equipment and operation, option (1), are described in detail in this method.

2. Apparatus

2.1 Sampling Train. The sampling train configuration is shown in Figure 5G–1 and consists of the following components:

2.1.1 Probe. Stainless steel (e.g., 316 or grade more corrosion resistant) or glass about 95 mm (¾ in.) I.D., 0.6 m (24 in.) in length. If made of stainless steel, the probe shall be constructed from seamless tubing.

2.1.2 Pitot Tube. Type S, as described in Section 2.1 of Method 2. The Type S pitot tube assembly shall have a known coefficient, determined as outlined in Method 2, Section 4.

Alternatively, a standard pitot may be used as described in Method 2, Section 2.1.

2.1.3 Differential Pressure Gauge. Inclined manometer or equivalent device, as described in Method 2, Section 2.2. One manometer shall be used for velocity head (Δp) readings and another (optional) for orifice differential pressure readings (ΔH).

2.1.4 Filter Holders. Two each made of borosilicate glass, stainless steel, or Teflon, with a glass frit or stainless steel filter support and a silicone rubber, Teflon, or Viton gasket. The holder design shall provide a positive seal against leakage from the outside or around the filters. The filter holders shall be placed in series with the backup filter holder located 25 to 100 mm (1 to 4 in.) downstream from the primary filter holder. The filter holder shall be capable of holding a filter with a 100 mm (4 in.) diameter, except as noted in Section 7.

Note: Mention of trade names or specific product does not constitute endorsement by the Environmental Protection Agency.

2.1.5 Filter Temperature Monitoring System. A temperature gauge capable of measuring temperature to within 1.5 percent of absolute temperature. The gauge shall be installed at the exit side of the front filter holder so that the sensing tip of the temperature gauge is in direct contact with the sample gas or in a thermowell as shown in Figure 5G–1. The temperature gauge shall comply with the calibration specifications in Method 2, Section 4. Alternatively, the sensing tip of the temperature gauge may be installed at the inlet side of the front filter holder.

2.1.6 Dryer. Any system capable of removing water from the sample gas to less than 1.5 percent moisture (volume percent) prior to the metering system. System includes monitor for demonstrating that sample gas temperature is less than 20 °C (68 °F).

2.1.7 Metering System. Same as Method 5, Section 2.1.8.

2.1.8 Barometer. Mercury, aneroid, or other barometer capable of measuring atmospheric pressure to within 2.5 mm Hg (0.1 in. Hg).

2.1.9 Dilution Tunnel Gas Temperature Measurement. A temperature gauge capable of measuring temperature to within 1.5 percent of absolute temperature.

2.2 Dilution Tunnel. The dilution tunnel apparatus is shown in Figure 5G–2 and consists of the following components:

2.2.1 Hood. Constructed of steel with a minimum diameter of 0.3 m (1 ft) on the large end and a standard 0.15 to 0.3 m (0.5 to 1 ft) coupling capable of connecting to standard 0.15 to 0.3 m (0.5 to 1 ft) stove pipe on the small end.

2.2.2 90° Elbows. Steel 90° elbows, 0.15 to 0.3 m (0.5 to 1 ft) in diameter for connecting mixing duct, straight duct and damper (optional) assembly. There shall be at least two 90° elbows upstream of the sampling section (see Figure 5G–2).

2.2.3 Straight Duct. Steel, 0.15 to 0.3 m (0.5 to 1 ft) in diameter to provide the ducting for the dilution apparatus upstream of the sampling section. Steel duct, 0.15 m (0.5 ft) in diameter shall be used for the sampling section. In the sampling section, at least 1.2 m (4 ft) downstream of the elbow, shall be two holes (velocity traverse ports) at 90° to each other of sufficient size to allow entry of the pitot for traverse measurements. At least 1.2 m (4 ft) downstream of the velocity traverse ports, shall be one hole (sampling port) of sufficient size to allow entry of the sampling probe. Ducts of larger diameter may be used for the sampling section, provided the specifications for minimum gas velocity and the dilution rate range shown in Section 4 are maintained. The length of duct from the hood inlet to the sampling ports shall not exceed 9.1 m (30 ft).

2.2.4 Mixing Baffles. Steel semicircles (two) attached at 90° to the duct axis on opposite sides of the duct midway between the two elbows upstream of sampling section. The space between the baffles shall be about 0.3 m (12 in.).

2.2.5 Blower. Squirrel cage or other fan capable of extracting gas from the dilution tunnel of sufficient flow to maintain the velocity and dilution rate specifications in Section 4 and exhausting the gas to the atmosphere.

2.3 Sample Recovery. Probe brushes, wash bottles, sample storage containers, petri dishes, and a funnel as described in Method 5, Section 2.2.1 through 2.2.4, and 2.2.8, respectively, are needed.

2.4 Analysis. Glass weighing dishes, desiccator, analytical balance, beakers (250 ml or smaller), hygrometer, and temperature gauge as described in Method 5, Sections 2.3.1 through 2.3.3 and 2.3.5 through 2.3.7, respectively, are needed.

3. Reagents

3.1 Sampling. The reagents used in sampling are as follows:

3.1.1 Filters. Glass fiber filters with a minimum diameter of 100 mm (4 in.), without organic binder, exhibiting at least 99.95 percent efficiency (<0.05 percent penetration) on 0.3-micron dioctyl phthalate smoke particles. Gelman A/E 61631 has been found acceptable for this purpose.

3.1.2 Stopcock Grease. Same as Method 5, Section 3.1.5.

3.2 Sample Recovery. Acetone-reagent grade, same as Method 5, Section 3.2.

3.3 Analysis. Two reagents are required for the analysis:

3.3.1 Acetone. As in Section 3.2.

3.3.2 Desiccant. Anhydrous calcium sulfate, calcium chloride, or silica gel, indicating type.

4. Procedure

4.1 Dilution Tunnel. A schematic of a dilution tunnel is shown in Figure 5G–2. The dilution tunnel dimensions and other features are described in Section 2.2. Assemble the dilution tunnel sealing joints and seams to prevent air leakage. Clean the dilution tunnel with an appropriately sized, wire chimney brush before each certification test.

4.1.1 Draft Determination. Prepare the wood heater as in Method 28, Section 6.2.1. Locate the dilution tunnel hood centrally over the wood heater stack exhaust. Operate the dilution tunnel blower at the flow rate to be used during the test run. Measure the draft imposed on the wood heater by the dilution tunnel (i.e., the difference in draft measured with and without the dilution tunnel operating) as described in Method 28, Section 6.2.3. Adjust the distance between the top of the wood heater stack exhaust and the dilution tunnel hood so that the dilution tunnel induced draft is less than 1.25 Pa (0.005 in. H_2O). Have no fire in the wood heater, close the wood heater doors, and open fully the air supply controls during this check and adjustment.

4.1.2 Smoke Capture. During the pretest ignition period described in Method 28, Section 6.3, operate the dilution tunnel and visually monitor the wood heater stack exhaust. Operate the wood heater with the doors closed and determine that 100 percent of the exhaust gas is collected by the dilution tunnel hood. If less than 100 percent of the wood heater exhaust gas is collected, adjust the distance between the wood heater stack and the dilution tunnel hood until no visible exhaust gas is escaping. Stop the pretest ignition period, and repeat the draft determination procedure described in Section 4.1.1.

4.2 Velocity Measurements. During the pretest ignition period described in Method 28, Section 6.3, conduct a velocity traverse to identify the point of average velocity. This single point shall be used for measuring velocity during the test run.

4.2.1 Velocity Traverse. Measure the diameter of the duct at the velocity traverse port location through both ports. Calculate the duct area using the average of the two diameters. A pretest leak-check of pitot lines as in Method 2, Section 3.1, is recommended. Place the calibrated pitot tube at the centroid of the stack in either of the velocity traverse ports. Adjust the damper or similar device on the blower inlet until the velocity indicated by the pitot is approximately 220 m/min (715 fpm). Continue to read the Δp and temperature until the velocity has remained constant (less than 5 percent change) for 1 minute. Once a constant velocity is obtained at the centroid of the duct, perform a velocity traverse as outlined in Method 2, Section 3.3 using four points per traverse as outlined in Method 1. Measure the Δp and tunnel temperature at each traverse point and record the readings. Calculate the total gas flow rate using calculations contained in Method 2, Section 5. Verify that the flow rate is 4 ± 0.45 sm^3/min (140 ± 14 scfm); if not, readjust the damper, and repeat the velocity traverse. The moisture may be assumed to be 4 percent (100 percent relative humidity at 85

F). Direct moisture measurements such as outlined in EPA Method 4 are also permissible.

Note: If burn rates exceed 3 kg/hr (6.6 lb/hr), dilution tunnel duct flow rates greater than 4 sm^3/min (140 scfm) and sampling section duct diameters larger than 150 mm (6 in.) are allowed. If larger ducts or flow rates are used, the sampling section velocity shall be at least 220 m/min (715 fpm). In order to ensure measurable particulate mass catch, it is recommended that the ratio of the average mass flow rate in the dilution tunnel to the average fuel burn rate be less than 150:1 if larger duct sizes or flow rates are used.

4.2.2 Testing Velocity Measurements. After obtaining velocity traverse results that meet the flow rate requirements, choose a point of average velocity and place the pitot and thermocouple at that location in the duct. Alternatively, locate the pitot and thermocouple at the duct centroid and calculate a velocity correction factor for the centroidal position. Mount the pitot to ensure no movement during the test run and seal the port holes to prevent any air leakage. Align the pitot to be parallel with the duct axis, at the measurement point. Check that this condition is maintained during the test run (about 30-minute intervals). Monitor the temperature and velocity during the pretest ignition period to ensure the proper flow rate is maintained. Make adjustments to the dilution tunnel flow rate as necessary.

4.3 Sampling.

4.3.1 Pretest Preparation. It is suggested that sampling equipment be maintained and calibrated according to the procedure described in APTD–0576.

Check and desiccate filters as described in Method 5, Section 4.1.1.

4.3.2 Preparation of Collection Train. During preparation and assembly of the sampling train, keep all openings where contamination can occur covered until just prior to assembly or until sampling is about to begin.

Using a tweezer or clean disposable surgical gloves, place one labeled (identified) and weighed filter in each of the filter holders. Be sure that each of the filters is properly centered and the gasket properly placed so as to prevent the sample gas stream from circumventing the filter. Check each of the filters for tears after assembly is completed.

Mark the probe with heat resistant tape or by some other method to denote the proper distance into the stack or duct.

Set up the train as in Figure 5G–1.

4.3.3 Leak-Check Procedures.

4.3.3.1 Pretest Leak-Check. A pretest leak-check is recommended, but not required. If the tester opts to conduct the pretest leak-check, conduct the leak-check as described in Method 5, Section 4.1.4.1. A vacuum 130 mm Hg (5 in. Hg) may be used instead of 380 mm Hg (15 in. Hg).

4.3.3.2 Post-Test Leak-Check. A leak-check is mandatory at the conclusion of each test run. The leak-check shall be done in accordance with the procedures described in Method 5, Section 4.1.4.1. A vacuum of 130 mm Hg (5 in. Hg) or the greatest vacuum measured during the test run, whichever is greater, may be used instead of 380 mm Hg (15 in. Hg).

4.3.4 Preliminary Determinations. Determine the pressure, temperature and the average velocity of the tunnel gases as in Section 4.2. Moisture content of diluted tunnel gases is assumed to be 4 percent for making flow rate calculations; the moisture content may be measured directly as in Method 4.

4.3.5 Sampling Train Operation. Position the probe inlet at the stack centroid, and block off the openings around the probe and porthole to prevent unrepresentative dilution of the gas stream. Be careful not to bump the probe into the stack wall when removing or inserting the probe through the porthole; this minimizes the chance of extracting deposited material.

Begin sampling at the start of the test run as defined in Method 28, Section 6.4.1. During the test run, maintain a sample flow rate proportional to the dilution tunnel flow rate (within 10 percent of the initial proportionality ratio) and a filter holder temperature of no greater than 32 °C (90 °F). The initial sample flow rate shall be approximately 0.015 m^3/min (0.5 cfm).

For each test run, record the data required on a data sheet such as the one shown in Figure 5G–3. Be sure to record the initial dry gas meter reading. Record the dry gas meter readings at the beginning and end of each sampling time increment and when sampling is halted. Take other readings as indicated on Figure 5G–3 at least once each 10 minutes during the test run. Since the manometer level and zero may drift because of vibrations and temperature changes, make periodic checks during the test run.

For the purposes of proportional sampling rate determinations, data from calibrated flow rate devices, such as glass rotameters, may be used in lieu of incremental dry gas meter readings. Proportional rate calculation procedures must be revised, but acceptability limits remain the same.

During the test run, make periodic adjustments to keep the temperature between (or upstream of) the filters at the proper level. Do not change sampling trains during the test run.

At the end of the test run (see Method 28, Section 6.4.6), turn off the coarse adjust valve, remove the probe from the stack, turn off the pump, record the final dry gas meter reading, and conduct a post-test leak-check, as outlined in Section 4.3.3. Also, leak-check the pitot lines as described in Method 2, Section 3.1; the lines must pass this leak-check in order to validate the velocity head data.

4.3.6 Calculation of Proportional Sampling Rate. Calculate percent proportionality (see Calculations, Section 6) to determine whether the run was valid or another test run should be made.

4.4 Sample Recovery. Begin recovery of the probe and filter samples as described in Method 5, Section 4.2, except that an acetone blank volume of about 50 ml or more may be used.

Treat the samples as follows:

Container No. 1. Carefully remove the filter from the primary filter holder and place it in its identified (labeled) petri dish container. Use a pair of tweezers and/or clean disposable surgical gloves to handle the filter. If it is necessary to fold the filter, do so such that the particulate cake is inside the fold. Carefully transfer to the petri dish any particulate matter and/or filter fibers which adhere to the filter holder gasket, by using a dry Nylon bristle brush and/or a sharp-edged blade. Seal the container.

Container No. 2. Remove the filter from the second filter holder using the same procedures as described above.

Note: The two filters may be placed in the same container for desiccation and weighing. Use the sum of the filter tare weights to determine the sample mass collected.

Container No. 3. Taking care to see that dust on the outside of the probe or other exterior surfaces does not get into the sample, quantitatively recover particulate matter or any condensate from the probe and filter holders by washing and brushing these components with acetone and placing the wash in a labeled (No. 3) glass container. At least three cycles of brushing and rinsing are necessary.

Between sampling runs, keep brushes clean and protected from contamination.

After all acetone washings and particulate matter have been collected in the sample containers, tighten the lids on the sample containers so that the acetone will not leak out when transferred to the laboratory weighing area. Mark the height of the fluid levels to determine whether leakage occurs during transport. Label the containers clearly to identify contents. Requirements for capping and transport of sample containers are not applicable if sample recovery and analysis occur in the same room.

4.5 Analysis. Record the data required on a sheet such as the one shown in Figure 5G–4. Use the same analytical balance for determining tare weight and final sample weights. Handle each sample container as follows:

Containers No. 1 and 2. Leave the contents in the sample containers or transfer the filters and loose particulate to tared glass weighing dishes. Desiccate for no more than 36 hours before the initial weighing, weigh to a constant weight, and report the results to the nearest 0.1 mg. For purposes of this section, the term "constant weight" means a difference of no more than 0.5 mg or 1 percent of total sample weight (less tare weight), whichever is greater, between two consecutive weighings, with no less than 2 hours between weighings.

Container No. 3. Note the level of liquid in the container, and confirm on the analysis sheet whether leakage occurred during transport. If a noticeable amount of leakage has occurred, either void the sample or use methods, subject to the approval of the Administrator, to correct the final results. Determination of sample leakage is not applicable if sample recovery and analysis occur in the same room. Measure the liquid in this container either volumetrically to within 1 ml or gravimetrically to within 0.5 g. Transfer the contents to a tared 250 ml or smaller beaker and evaporate to dryness at ambient temperature and pressure. Desiccate and weigh to a constant weight. Report the results to the nearest 0.1 mg.

"Acetone Blank" Container. Measure acetone in this container either volumetrically or gravimetrically. Transfer the acetone to a tared 250 ml or smaller beaker and evaporate to dryness at ambient temperature and pressure. Desiccate and weigh to a constant weight. Report the results to the nearest 0.1 mg.

5. Calibration

Maintain a laboratory record of all calibrations.

5.1 Pitot Tube. The Type S pitot tube assembly shall be calibrated according to the procedure outlined in Method 2, Section 4, prior to the first certification test and checked semiannually, thereafter. A standard pitot need not be calibrated but shall be inspected and cleaned, if necessary, prior to each certification test.

5.2 Volume Metering System.

5.2.1 Initial and Periodic Calibration. Before its initial use and at least semiannually thereafter, calibrate the volume metering system as described in Method 5, Section 5.3.1, except that the wet test meter with a capacity of 3.0 liters/rev (0.1 ft^3/rev) may be used. Other liquid displacement systems accurate to within 1 percent, may be used as calibration standards.

Procedures and equipment specified in Method 5, Section 7, for alternative calibration standards, including calibrated dry gas meters and critical orifices, are allowed for calibrating the dry gas meter in the sampling train. A dry gas meter used as a calibration standard shall be recalibrated at least once annually.

5.2.2 Calibration After Use. After each certification or audit test (four or more test runs conducted on a wood heater at the four burn rates specified in Method 28), check calibration of the metering system by performing three calibration runs at a single, intermediate flow rate as described in Method 5, Section 5.3.2.

Procedures and equipment specified in Method 5, Section 7, for alternative calibration standards are allowed for the post-test dry gas meter calibration check.

5.2.3 Acceptable Variation in Calibration. If the dry gas meter coefficient values obtained before and after a certification test differ by more than 5 percent, the certification test shall either be voided and repeated, or calculations for the certification test shall be performed using whichever meter coefficient value (i.e., before or after) gives the lower value of total sample volume.

5.3 Temperature Gauges. Use the procedure in Method 2, Section 4.3, to calibrate temperature gauges before the first certification or audit test and at least semiannually, thereafter.

5.4 Leak-Check of Metering System Shown in Figure 5G-1. That portion of the sampling train from the pump to the orifice meter shall be leak-checked prior to initial use and after each certification or audit test. Leakage after the pump will result in less volume being recorded than is actually sampled. Use the procedure described in Method 5, Section 5.6.

Similar leak-checks shall be conducted for other types of metering systems (i.e., without orifice meters).

5.5 Barometer. Calibrate against a mercury barometer before the first certification test and at least semiannually, thereafter. If a mercury barometer is used, no calibration is necessary. Follow the manufacturer's instructions for operation.

5.6 Analytical Balance. Perform a multipoint calibration (at least five points spanning the operational range) of the analytical balance before the first certification test and semiannually, thereafter. Before each certification test, audit the balance by weighing at least one calibration weight (class F) that corresponds to 50 to 150 percent of the weight of one filter. If the scale cannot reproduce the value of the calibration weight to within 0.1 mg, conduct the multipoint calibration before use.

6. Calculations

Carry out calculations, retaining at least one extra decimal figure beyond that of the acquired data. Round off figures after the final calculation. Other forms of the equations may be used as long as they give equivalent results.

6.1 Nomenclature.

B_{ws} = Water vapor in the gas stream, proportion by volume (assumed to be 0.04).

c_s = Concentration of particulate matter in stack gas, dry basis, corrected to standard conditions, g/dsm^3 (g/dscf).

E = Particulate emission rate, g/hr.

L_a = Maximum acceptable leakage rate for either a pretest or post-test leak-check, equal to 0.00057 m^3/min (0.02 cfm) or 4 percent of the average sampling rate, whichever is less.

L_p = Leakage rate observed during the post-test leak-check, m^3/min (cfm).

m_a = Mass of residue of acetone blank after evaporation, mg.

m_{aw} = Mass of residue from acetone wash after evaporation, mg.

m_n = Total amount of particulate matter collected, mg.

M_w = Molecular weight of water, 18.0 g/g-mole (18.0 lb/lb-mole).

P_{bar} = Barometric pressure at the sampling site, mm Hg (in. Hg).

PR = Percent of proportional sampling rate.

P_s = Absolute gas pressure in dilution tunnel, mm Hg (in. Hg).

P_{std} = Standard absolute pressure, 760 mm Hg (29.92 in. Hg).

Q_{sd} = Average gas flow rate in dilution tunnel, calculated as in Method 2, Equation 2-10, dsm^3/hr (dscf/hr).

T_m = Absolute average dry gas meter temperature (see Figure 5G-3), °K (°R).

T_{mi} = Absolute average dry gas meter temperature during each 10-minute interval, i, of the test run, °K (°R).

T_s = Absolute average gas temperature in the dilution tunnel (see Figure 5G-3), °K (°R).

T_{si} = Absolute average gas temperature in the dilution tunnel during each 10 minute interval, i, of the test run, °K (°R).

T_{std} = Standard absolute temperature, 293 °K (528 °R).

V_a = Volume of acetone blank, ml.

V_{aw} = Volume of acetone used in wash, ml.

V_m = Volume of gas sample as measured by dry gas meter, dm^3 (dcf).

V_{mi} = Volume of gas sample as measured by dry gas meter during each 10-minute interval, i, of the test run, dm^3 (dcf).

$V_{m(std)}$ = Volume of gas sample measured by the dry gas meter, corrected to standard conditions, dsm^3 (dscf).

V_s = Average gas velocity in dilution tunnel, calculated by Method 2, Equation 2-9, m/sec (ft/sec). The dilution tunnel dry gas molecular weight may be assumed to be 29 g/g mole (lb/lb mole).

V_{si} = Average gas velocity in dilution tunnel during each 10-minute interval, i, of the test run, calculated by Method 2, Equation 2-9, m/sec (ft/sec).

Y = Dry gas meter calibration factor.

ΔH = Average pressure differential across the orifice meter, if used (see Figure 5G-2), mm H_2O (in. H_2O).

Θ = Total sampling time, min.

10 = 10 minutes, length of first sampling period.

13.6 = Specific gravity of mercury.

100 = Conversion to percent.

6.2 Dry Gas Volume. Correct the sample volume measured by the dry gas meter to standard conditions (20 °C, 760 mm Hg or 68° F, 29.92 in. Hg) by using Equation 5G-1. (If no orifice meter is used in sampling train, assume $\Delta H = 0$ or measure static pressure at dry gas meter outlet.)

$$V_{m(std)} = V_m Y \left(\frac{T_{std}}{T_m}\right)\left(\frac{P_{bar} + \frac{\Delta H}{13.6}}{P_{std}}\right) = K_1 V_m Y \left(\frac{P_{bar} + (\Delta H/13.6)}{T_m}\right) \quad \text{Eq. 5G-1}$$

where:

$K_1 = 0.3858$ °K/mm Hg for metric units.
$= 17.64$ °R/in. Hg for English units.

Note: If L_p exceeds L_a, Equation 5G–1 must be modified as follows: Replace V_m in Equation 5G–1 with the expression:

$[V_m - (L_p - L_a)\Theta]$

6.3 Solvent Wash Blank.

$$m_{sw} = \left(\frac{m_s V_{sw}}{V_s} \right) \qquad \text{Eq. 5G–2}$$

6.4 Total Particulate Weight. Determine the total particulate catch, m_n, from the sum of the weights obtained from Containers 1, 2, and 3, less the acetone blank (see Figure 5G–4).

6.5 Particulate Concentration.

$c_s = (0.001\ g/mg)\ (m_n/V_{m(std)})$ Eq. 5G–3

6.6 Particulate Emission Rate.

$E = c_s Q_{sd}$ Eq. 5G–4

Note: Particulate emission rate results produced using the sampling train described in Section 2 and shown in Figure 5G–1 shall be adjusted for reporting purposes by the following methods adjustment factor:

$E_{std} = 1.82\ (E)^{0.93}$ Eq. 5G–5

6.7 Proportional Rate Variation. Calculate PR for each 10-minute interval, i, of the test run.

$$PR = \left(\frac{\Theta(V_{mi} v_s T_m T_n)}{10(V_m v_{ni} T_s T_{mi})} \right) \times 100 \qquad \text{Eq. 5G–6}$$

Alternate calculation procedures for proportional rate variation may be used if other sample flow rate data (e.g., orifice flow meters or rotameters) are monitored to maintain proportional sampling rates. The proportional rate variations shall be calculated for each 10-minute interval by comparing the stack to nozzle velocity ratio for each 10-minute interval to the average stack to nozzle velocity ratio for the test run. Proportional rate variation may be calculated for intervals shorter than 10 minutes with appropriate revisions to Equation 5G–6.

6.8 Acceptable Results. If no more than 10 percent of the PR values for all the intervals exceed 90 percent $\leq PR \leq 110$ percent, and if no PR value for any interval exceeds 80 percent $\leq PR \leq 120$ percent, the results are acceptable. If the PR values for the test run are judged to be unacceptable, report the test run emission results, but do not include the results in calculating the weighted average emission rate, and repeat the test run.

7. Alternative Sampling and Analysis Procedure

7.1 Method 5H Sampling Train. The sampling and analysis train and procedures described in Method 5H, Sections 2.1, 3.1, 3.2, 5.1, 5.2.3, 5.3, and 5.6 may be used in lieu of similar sections in Method 5G. Operation of the Method 5H sampling train in the dilution tunnel is as described in Section 4.3.5 of this method. Filter temperatures and condenser conditions are as described in Method 5H. No methods adjustment factor as described in Equation 5G–5, Section 6.6, is to be applied to the particulate emission rate data produced by this alternative method.

7.2 Dual Sampling Trains. The tester may operate two sampling trains simultaneously at sample flow rates other than that specified in Section 4.3.5 provided the following specifications are met.

7.2.1 Sampling Train. The sampling train configuration shall be the same as specified in Section 2.1, except the probe, filter, and filter holder need not be the same sizes as specified in the applicable sections. Filter holders of plastic materials such as Nalgene or polycarbonate materials may be used (the Gelman 1119 filter holder has been found suitable for this purpose). With such materials, it is recommended not to use solvents in sample recovery. The filter face velocity shall not exceed 150 mm/sec (30 ft/min) during the test run. The dry gas meter shall be calibrated for the same flow rate range as encountered during the test runs. Two separate, complete sampling trains are required for each test run.

7.2.2 Probe Location. Locate the two probes in the dilution tunnel at the same level (see Section 2.2.3). Two sample ports are necessary. Locate the probe inlets within the 50 mm (2 in.) diameter centroidal area of the dilution tunnel no closer than 25 mm (1 in.) apart.

7.2.3 Sampling Train Operation. Operate the sampling trains as specified in Section 4.3.5, maintaining proportional sampling rates and starting and stopping the two sampling trains simultaneously. The pitot values as described in Section 4.2.2 shall be used to adjust sampling rates in both sampling trains.

7.2.4 Recovery and Analysis of Sample. Recover and analyze the samples from the two sampling trains separately, as specified in Sections 4.4 and 4.5.

For this alternative procedure, the probe and filter holder assembly may be weighed without sample recovery (use no solvents) described above in order to determine the sample weight gains. For this approach, weigh the clean, dry probe and filter holder assembly upstream of the front filter (without filters) to the nearest 0.1 mg to establish the tare weights. The filter holder section between the front and second filter need not be weighed. At the end of the test run, carefully clean the outside of the probe, cap the ends, and identify the sample (label). Remove the filters from the filter holder assemblies as described for containers Nos. 1 and 2 above. Reassemble the filter holder assembly, cap the ends, identify the sample (label), and transfer all the samples to the laboratory weighing area for final weighing. Descriptions of capping and transport of samples are not applicable if sample recovery and analysis occur in the same room.

For this alternative procedure, filters may be weighed directly without a petri dish. If the probe and filter holder assembly are to be weighed to determine the sample weight, rinse the probe with acetone to remove moisture before desiccating prior to the test run. Following the test run, transport the probe and filter holder to the dessicator, and uncap the openings of the probe and the filter holder assembly. Desiccate no more than 36 hours and weigh to a constant weight. Report the results to the nearest 0.1 mg.

7.2.5 Calculations. Calculate an emission rate (Section 6.6) for the sample from each sampling train separately and determine the average emission rate for the two values. The two emission rates shall not differ by more than 7.5 percent from the average emission rate, or 7.5 percent of the weighted average emission rate limit in the applicable standard, whichever is greater. If this specification is not met, the results are unacceptable. Report the results, but do not include the results in calculating the weighted average emission rate. Repeat the test run until acceptable results are achieved, report the average emission rate for the acceptable test run, and use the average in calculating the weighted average emission rate.

8. Bibliography

1. Same as for Method 5, citations 1 through 11, with the addition of the following:

2. Oregon Department of Environmental Quality Standard Method for Measuring the Emissions and Efficiencies of Woodstoves, June 8, 1984, Pursuant to Oregon Administrative Rules Chapter 340, Division 21.

3. American Society for Testing Materials Proposed Test Methods for Heating Performance and Emissions of Residential Wood-fired Closed Combustion-Chamber Heating Appliances, E-6 Proposal P 180, August 1986.

BILLING CODE 6560-50-M

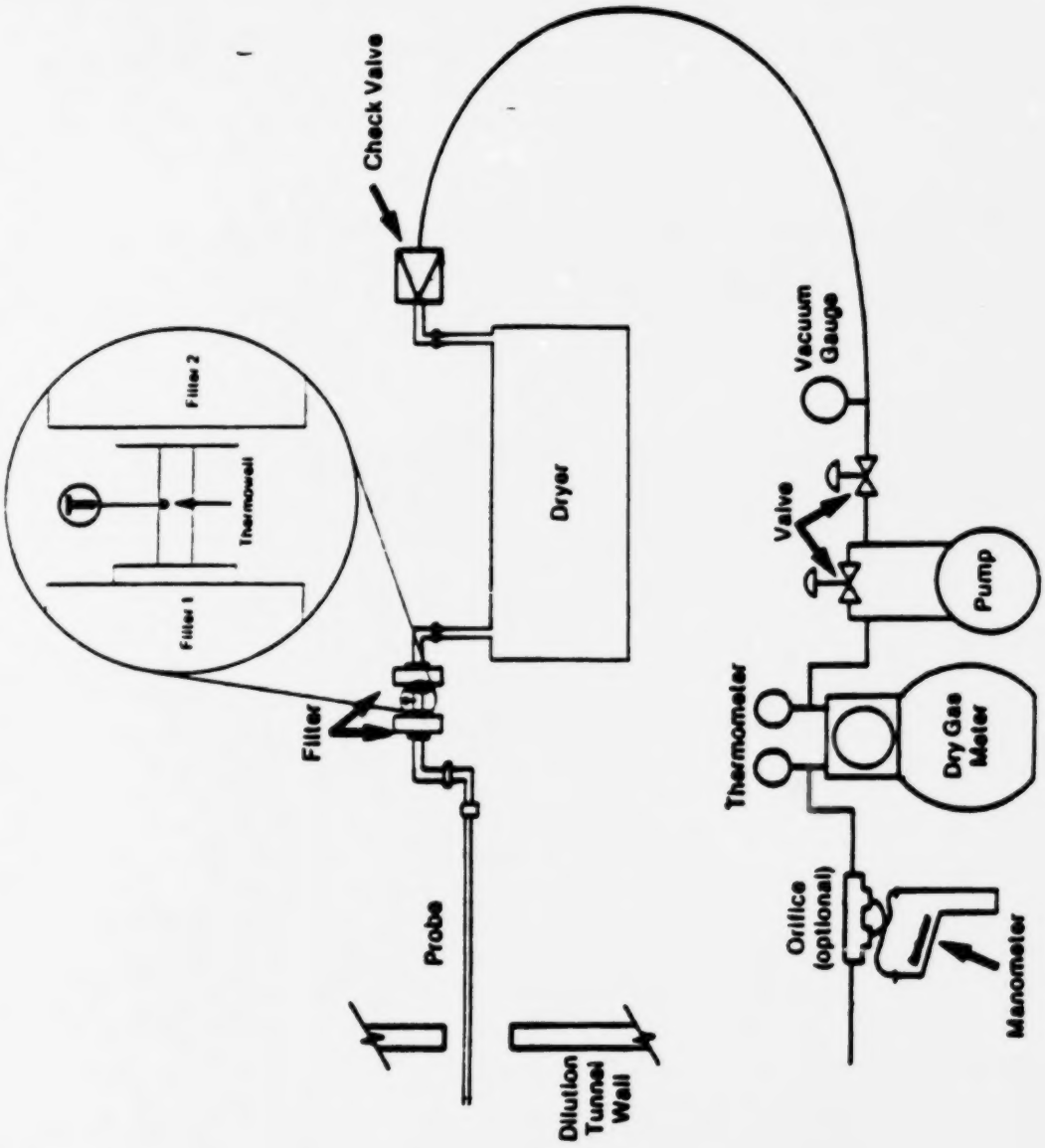

Figure 5G-1. Sampling train.

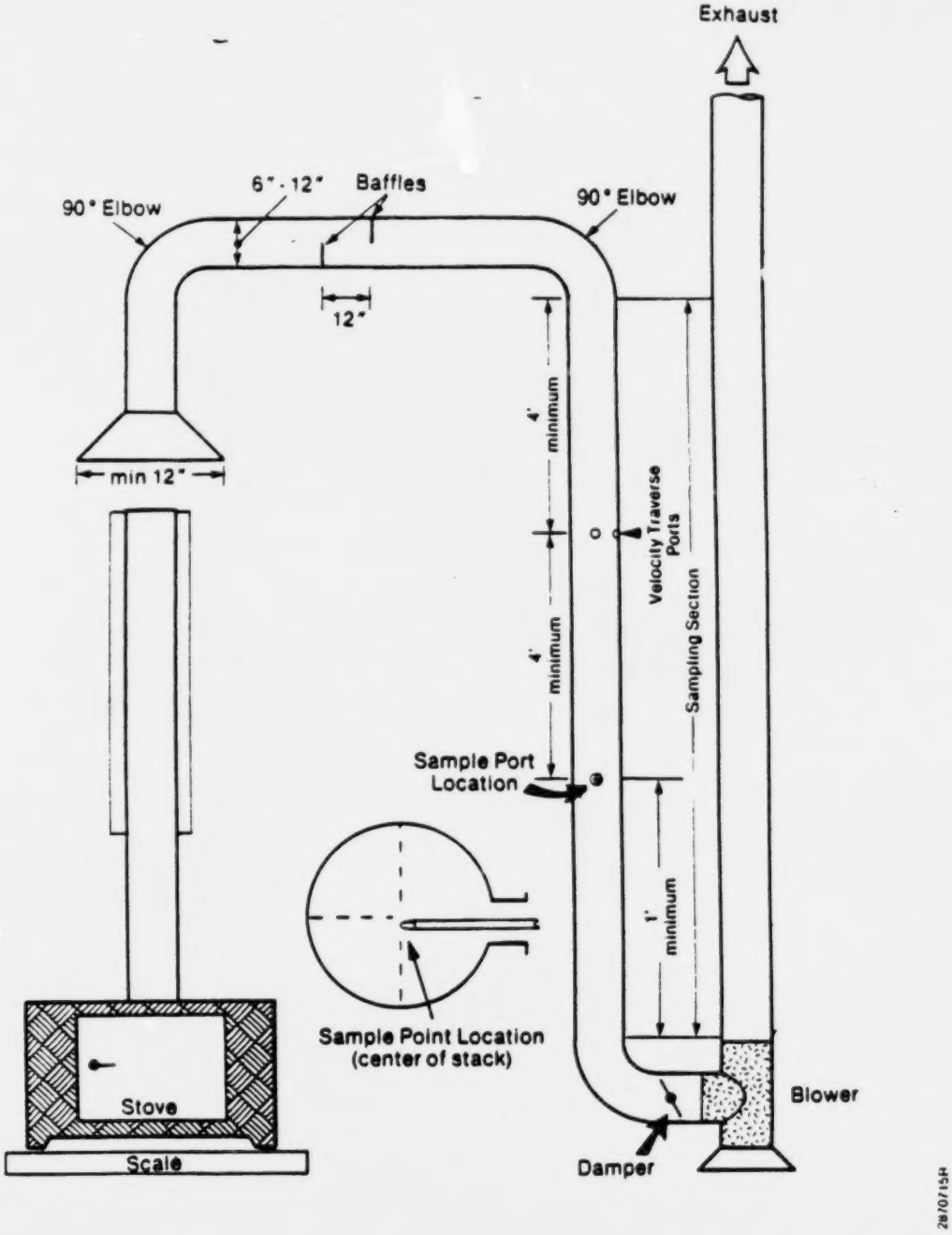

Figure 5G-2. Suggested construction details of the dilution tunnel.

Stove _____
Test Method _____
Operator _____
Date _____
Run No. _____
Start Time _____
Stop Time _____
Sample Box No. _____
Meter Box No. _____
Meter $\Delta H_@$ (optional) _____

Pitot tube coefficient, Cp _____
Room temperature, °C, (°F) _____
Barometric pressure mb (in. Hg) _____
Measured or assumed moisture, % _____
Final leak rate, m^3/min, (cfm) _____
Probe liner material _____
Draft or static pressure, mm H_2O (in. H_2O) _____
Filter Nos. _____

Clock time	Test run time (θ) min.	Vacuum mm Hg (in. Hg)	Tunnel temperature (T_s) °C (°F)	Velocity head (ΔP_s) mm (in.) H_2O	Sample flow rate indicator (orifice meter optional) mm H_2O (in. H_2O)	Gas meter volume m^3 (ft^3)	Gas sample temperature at dry gas meter (In) °C (°F)	Gas sample temperature at dry gas meter (Out) °C (°F)	Filter holder temperature °C (°F)	Temperature of gas leaving dryer or last impinger °C (°F)
Total							Avg.	Avg		
Average							Avg			

Figure 5G-3. Particulate field data sheet.

BILLING CODE 6560-50-C

Stove _____
Date _____
Run No _____
Filter No _____
Liquid lost during transport, ml _____
Acetone blank volume, ml _____
Acetone wash volume, ml _____
Acetone blank concentration, mg/mg _____
Acetone wash blank, mg _____

Container No.	Weight of particulate collected, mg		
	Final weight	Tare weight	Weight gain
1			
2			
3			
Total			
Less acetone blank			
Weight of particulate matter			

STACK MOISTURE MEASUREMENT DATA (OPTIONAL)

	Volume of liquid water collected	
	Impinger volume, ml	Silica gel weight, g
Final		
Initial		
Liquid collected		
Total volume collected		g[1] ml

[1] Convert weight of water to volume by dividing total weight increase by density of water (1 g/ml).

$$\frac{\text{Increase, g}}{(1\ \text{g/ml})} = \text{Volume water, ml}$$

Method 5H—Determination of Particulate Emissions From Wood Heaters From a Stack Location

Applicability and Principle

1.1 Applicability. This method is applicable for the determination of particulate matter and condensible emissions from wood heaters.

1.2 Principle. Particulate matter is withdrawn proportionally from the wood heater exhaust and is collected on two glass fiber filters separated by impingers immersed in an ice bath. The first filter is maintained at a temperature of no greater than 120 °C (248 °F). The second filter and the impinger system are cooled such that the exiting temperature of the gas is no greater than 20 °C (68 °F). The particulate mass collected in the probe, on the filters, and in the impingers is determined gravimetrically after removal of uncombined water.

2. Apparatus

2.1 Sampling Train. The sampling train configuration is shown in Figure 5H-1. APTD-0576 is suggested for operating and maintenance procedures. The train consists of the following components:

2.1.1 Probe Nozzle. (Optional) Same as Method 5, Section 2.1.1. A straight sampling probe without a nozzle is an acceptable alternative.

2.1.2 Probe Liner. Same as Method 5, Section 2.1.2, except that the maximum length of the sample probe shall be 0.6 m (2 ft) and probe heating is optional.

2.1.3 Differential Pressure Gauge. Same as Method 5, Section 2.1.4.

2.1.4 Filter Holders. Two each of borosilicate glass, with a glass frit or stainless steel filter support and a silicone rubber, Teflon, or Viton gasket. The holder design shall provide a positive seal against leakage from the outside or around the filter. The front filter holder shall be attached immediately at the outlet of the probe and prior to the first impinger. The second filter holder shall be attached on the outlet of the third impinger and prior to the inlet of the fourth (silica gel) impinger.

Note: Mention of trade names or specific product does not constitute endorsement by the Environmental Protection Agency.

2.1.5 Filter Heating System. Same as Method 5, Section 2.1.6.

2.1.6 Condenser. Same as Method 5, Section 2.1.7, used to collect condensible materials and determine the stack gas moisture content.

2.1.7 Metering System. Same as Method 5, Section 2.1.8.

2.1.8 Barometer. Mercury, aneroid, or other barometer capable of measuring atmospheric pressure to within 2.5 mm Hg (0.1 in. Hg).

2.2 Stack Flow Rate Measurement System. A schematic of an example test system is shown in Figure 5H-2. The flow rate measurement system consists of the following components:

2.2.1 Sample Probe. A glass or stainless steel sampling probe.

2.2.2 Gas Conditioning System. A high density filter to remove particulate matter and a condenser capable of lowering the dew point of the gas to less than 5 °C (40 °F). Desiccant, such as Drierite, may be used to dry the sample gas. Do not use silica gel.

2.2.3 Pump. An inert (i.e., Teflon or stainless steel heads) sampling pump capable of delivering more than the total amount of sample required in the manufacturer's instructions for the individual instruments. A means of controlling the analyzer flow rate and a device for determining proper sample flow rate (e.g., precision rotameter, pressure gauge downstream of all flow controls) shall be provided at the analyzer. The requirements for measuring and controlling the analyzer flow rate are not applicable if data are presented that demonstrate the analyzer is insensitive to flow variations over the range encountered during the test.

2.2.4 CO Analyzer. Any analyzer capable of providing a measure of CO in the range of 0 to 10 percent by volume at least once every 10 minutes.

2.2.5 CO_2 Analyzer. Any analyzer capable of providing a measure of CO_2 in the range of 0 to 25 percent by volume at least once every 10 minutes.

Note: Analyzers with ranges less than those specified above may be used provided actual concentrations do not exceed the range of the analyzer.

2.2.6 Manifold. A sampling tube capable of delivering the sample gas to two analyzers and handling an excess of the total amount used by the analyzers. The excess gas is exhausted through a separate port.

2.2.7 Recorders (optional). To provide a permanent record of the analyzer outputs.

2.3 Proportional Gas Flow Rate System. To monitor stack flow rate changes and provide a measurement that can be used to adjust and maintain particulate sampling flow rates proportional to the stack flow rate. A schematic of the proportional flow rate system is shown in Figure 5H-2 and consists of the following components:

2.3.1 Tracer Gas Injection System. To inject a known concentration of SO_2 into the flue. The tracer gas injection system consists of a cylinder of SO_2, a gas cylinder regulator, a stainless steel needle valve or flow controller, a nonreactive (stainless steel and glass) rotameter, and an injection loop to disperse the SO_2 evenly in the flue.

2.3.2 Sample Probe. A glass or stainless steel sampling probe.

2.3.3 Gas Conditioning System. A combustor as described in Method 16A, Sections 2.1.5 and 2.1.6, followed by a high density filter to remove particulate matter, and a condenser capable of lowering the dew point of the gas to less than 5 °C (40 °F). Desiccant, such as Drierite, may be used to dry the sample gas. Do not use silica gel.

2.3.4 Pump. As described in Section 2.2.3.

2.3.5 SO_2 Analyzer. Any analyzer capable of providing a measure of the SO_2 concentration in the range of 0 to 1,000 ppm by volume (or other range necessary to measure the SO_2 concentration) at least once every 10 minutes.

2.3.6 Recorder (optional). To provide a permanent record of the analyzer outputs.

Note: Other tracer gas systems, including helium gas systems, are allowed for determining instantaneous proportional sampling rates.

2.4 Sample Recovery. Probe liner and probe nozzle brushes, wash bottles, sample storage containers, petri dishes, graduated cylinder or balance, plastic storage containers, funnel and rubber policeman, as described in Method 5, Sections 2.2.1 through 2.2.8, respectively, are needed.

2.5 Analysis. Weighing dishes, desiccator, analytical balance, beakers (250 ml or less), hygrometer or psychrometer, and temperature gauge as described in Method 5, Sections 2.3.1 through 2.3.7, respectively, are needed. In addition, a separatory funnel, glass or Teflon, 500 ml or greater, is needed.

3. Reagents

3.1 Sampling. The reagents used in sampling are as follows:

3.1.1 Filters. Glass fiber filters, without organic binder, exhibiting at least 99.95 percent efficiency (<0.05 percent penetration) on 0.3-micron dioctyl phthalate smoke particles. Gelman A/E 61631 filters have been found acceptable for this purpose.

3.1.2 Silica Gel. Same as Method 5, Section 3.1.2.

3.1.3 Water. Deionized distilled to conform to ASTM Specification D1193-77, Type 3 (incorporated by reference—see § 60.17). Run blanks prior to field use to eliminate a high blank on test samples.

3.1.4 Crushed Ice.

3.1.5 Stopcock Grease. Same as Method 5, Section 3.1.5.

3.2 Sample Recovery. Same as Method 5, Section 3.2.

3.3 Cylinder Gases. For the purposes of this procedure, span value is defined as the upper limit of the range specified for each analyzer as described in Section 2.2 or 2.3. If an analyzer with a range different from that specified in this method is used, the span value shall be equal to the upper limit of the range for the analyzer used (see Note in Section 2.2.5).

3.3.1 Calibration Gases. The calibration gases for the CO_2, CO and SO_2 analyzers shall be CO_2, CO, or SO_2, as appropriate, in N_2. CO_2 and CO calibration gases may be combined in a single cylinder.

There are two alternatives for checking the concentrations of the calibration gases. (a) The first is to use calibration gases that are documented traceable to National Bureau of Standards Reference Materials. Use *Traceability Protocol for Establishing True Concentrations of Gases Used for Calibrations and Audits of Continuous Source Emission Monitors* (Protocol Number 1) that is available from the Environmental Monitoring and Support Laboratory, Quality Assurance Branch, Mail Drop 77, Environmental Protection Agency, Research Triangle Park, North Carolina 27711. Obtain a certification from the gas manufacturer that the protocol was followed. These calibration gases are not to be analyzed with the test methods. (b) The second alternative is to use calibration gases not prepared according to the protocol. If this alternative is chosen, within 6 months prior to the certification test, analyze each of the CO_2 and CO calibration gas mixtures in triplicate using Method 3, and within 1 month prior to the certification test, analyze SO_2 calibration gas mixtures using Method 6. For the low-level, mid-level, or high-level gas mixtures, each of the individual SO_2 analytical results must be within 10 percent (or 10 ppm, whichever is greater) of the triplicate set average; CO_2 and CO test results must be within 0.5 percent CO_2 and CO; otherwise, discard the entire set and repeat the triplicate analyses. If the average of the triplicate test method results is within 5 percent for SO_2 gas (or 0.5 percent CO_2 and CO for the CO_2 and CO gases) of the calibration gas manufacturer's tag values, use the tag value; otherwise, conduct at least three additional test method analyses until the results of six individual SO_2 runs (the three original plus three additional) agree within 10 percent (or 10 ppm, whichever is greater) of the average (CO_2 and CO test results must be within 0.5 percent). Then use this average for the cylinder value. Four calibration gas levels are required as specified below:

3.3.1.1 High-level Gas. A gas concentration that is equivalent to 80 to 90 percent of the span value.

3.3.1.2 Mid-level Gas. A gas concentration that is equivalent to 45 to 55 percent of the span value.

3.3.1.3 Low-level Gas. A gas concentration that is equivalent to 20 to 30 percent of the span value.

3.3.1.4 Zero Gas. A gas concentration of less than 0.25 percent of the span value. Purified air may be used as zero gas for the CO_2, CO, and SO_2 analyzers.

3.3.2 SO_2 Injection Gas. A known concentration of SO_2 in N_2. The concentration must be at least 2 percent SO_2 with a maximum of 100 percent SO_2. The cylinder concentration shall be certified by the manufacturer to be within 2 percent of the specified concentration.

3.4 Analysis. Three reagents are required for the analysis:

3.4.1 Acetone. Same as 3.2.

3.4.2 Dichloromethane (Methylene Chloride). Reagent grade, <0.001 percent residue in glass bottles.

3.4.3 Desiccant. Anhydrous calcium sulfate, calcium chloride, or silica gel, indicating type.

4. Gas Measurement System Performance Specifications.

4.1 Response Time. The amount of time required for the measurement system to display 95 percent of a step change in gas concentration. The response time for each analyzer and gas conditioning system shall be no more than 2 minutes.

4.2 Zero Drift. The zero drift value for each analyzer shall be less than 2.5 percent of the span value over the period of the test run.

4.3 Calibration Drift. The calibration drift value measured with the mid-level calibration gas for each analyzer shall be less than 2.5 percent of the span value over the period of the test run.

4.4 Resolution. The resolution of the output for each analyzer shall be 0.5 percent of span value or less.

4.5 Calibration Error. The linear calibration curve produced using the zero and mid-level calibration gases shall predict the actual response to the low-level and high-level calibration gases within 2 percent of the span value.

5. Procedure

5.1 Pretest Preparation.

5.1.1 Filter and Desiccant. Same as Method 5, Section 4.1.1.

5.1.2 Sampling Probe and Nozzle. The sampling location for the particulate sampling probe shall be 2.45±0.15 m (8±0.5 ft) above the platform upon which the wood heater is placed (i.e., the top of the scale).

Select a nozzle, if used, sized for the range of velocity heads, such that it is not necessary to change the nozzle size in order to maintain proportional sampling rates. During the run, do not change the nozzle size.

Select a suitable probe liner and probe length to effect minimum blockage.

5.1.3 Preparation of Particulate Sampling Train. During preparation and assembly of the particulate sampling train, keep all openings where contamination can occur covered until just prior to assembly or until sampling is about to begin.

Place 100 ml of water in each of the first two impingers, leave the third impinger empty, and transfer approximately 200 to 300 g of preweighed silica gel from its container to the fourth impinger. More silica gel may be used, but care should be taken to ensure that it is not entrained and carried out from the impinger during sampling. Place the container in a clean place for later use in the sample recovery. Alternatively, the weight of the silica gel plus impinger may be determined to the nearest 0.5 g and recorded.

Using a tweezer or clean surgical gloves, place one labeled (identified) and weighed filter in each of the filter holders. Be sure that each of the filters is properly centered and the gasket properly placed so as to prevent the sample gas stream from circumventing the filter. Check the filters for tears after assembly is completed.

When glass liners are used, install the selected nozzle using a Viton A O-ring. Other connecting systems using either 316 stainless steel or Teflon ferrules may be used. Mark the probe with heat resistant tape or by some other method to denote the proper distance into the stack or duct.

Set up the train as in Figure 5H-1, using (if necessary) a very light coat of silicone grease on all ground glass joints, greasing only the outer portion (see APTD-0576) to avoid possibility of contamination by the silicone grease.

Place crushed ice around the impingers.

5.1.4 Leak-Check Procedures.

5.1.4.1 Pretest Leak-Check. A pretest leak-check is recommended, but not required. If the tester opts to conduct the pretest leak-check, conduct the leak-check as described in Method 5, Section 4.1.4.1, except that a vacuum of 130 mm Hg (5 in. Hg) may be used instead of 380 mm Hg (15 in. Hg).

5.1.4.2 Leak-Checks During Sample Run. If, during the sampling run, a component (e.g., filter assembly or impinger) change becomes necessary, conduct a leak-check as described in Method 5, Section 4.1.4.2.

5.1.4.3 Post-Test Leak-Check. A leak-check is mandatory at the conclusion of each sampling run. The leak-check shall be done in accordance with the procedures described in Method 5, Section 4.1.4.3, except that a vacuum of 130 mm Hg (5 in. Hg) or the greatest vacuum measured during the test run, whichever is greater, may be used instead of 380 mm Hg (15 in. Hg).

5.1.5 Tracer Gas Procedure. A schematic of the tracer gas injection and sampling systems is shown in Figure 5H-2.

5.1.5.1 SO_2 Injection Probe. Install the SO_2 injection probe and dispersion loop in the stack at a location 2.8±0.15 m (9.5±0.5 ft) above the sampling platform.

5.1.5.2 SO_2 Sampling Probe. Install the SO_2 sampling probe at the centroid of the stack at a location 4±0.15 m (13.5±0.5 ft) above the sampling platform.

5.1.6 Flow Rate Measurement System. A schematic of the flow rate measurement system is shown in Figure 5H-2. Locate the flow rate measurement sampling probe at the centroid of the stack at a location 2.3±0.3 m (7.5±1 ft) above the sampling platform.

5.2 Test Run Procedures. The start of the test run is defined as in Method 28, Section 6.4.1.

5.2.1 Tracer Gas Procedure. Within 1 minute after closing the wood heater door at the start of the test run, meter a known

concentration of SO_2 tracer gas at a constant flow rate into the wood heater stack. Monitor the SO_2 concentration in the stack, and record the SO_2 concentrations at 10-minute intervals or more often at the option of the tester. Adjust the particulate sampling flow rate proportionally to the SO_2 concentration changes using Equation 5H-6 (e.g., the SO_2 concentration at the first 10-minute reading is measured to be 100 ppm; the next 10 minute SO_2 concentration is measured to be 75 ppm; the particulate sample flow rate is adjusted from the initial 0.15 cfm to 0.20 cfm). A check for proportional rate variation shall be made at the completion of the test run using Equation 5H-10.

5.2.2 Volumetric Flow Rate Procedure. Apply stoichiometric relationships to the wood combustion process in determining the exhaust gas flow rate as follows:

5.2.2.1 Test Fuel Charge Weight. Record the test fuel charge weight in kilograms (wet) as specified in Method 28, Section 6.4.2. The wood is assumed to have the following weight percent composition: 51 percent carbon, 7.3 percent hydrogen, 41 percent oxygen. Record the wood moisture for each wood charge as described in Method 28, Section 6.2.5. The ash is assumed to have negligible effect on associated C, H, O concentrations after the test burn.

5.2.2.2 Measured Values. Record the CO and CO_2 concentrations in the stack on a dry basis every 10 minutes during the test run or more often at the option of the tester. Average these values for the test run. Use as a mole fraction (e.g., 10 percent CO_2 is recorded as 0.10) in the calculations to express total flow Equation 5H-7.

5.2.3 Particulate Train Operation. For each run, record the data required on a data sheet such as the one shown in Figure 5H-3. Be sure to record the initial dry gas meter reading. Record the dry gas meter readings at the beginning and end of each sampling time increment, when changes in flow rates are made, before and after each leak-check, and when sampling is halted. Take other readings as indicated on Figure 5H-3 at least once each 10 minutes during the test run.

Remove the nozzle cap, verify that the filter and probe heating systems are up to temperature, and that the probe is properly positioned. Position the nozzle, if used, facing into gas stream, or the probe tip in the 50 mm (2 in.) centroidal area of the stack.

Be careful not to bump the probe tip into the stack wall when removing or inserting the probe through the porthole; this minimizes the chance of extracting deposited material.

When the probe is in position, block off the openings around the probe and porthole to prevent unrepresentative dilution of the gas stream.

Begin sampling at the start of the test run as defined in Method 28, Section 6.4.1, start the sample pump, and adjust the sample flow rate to between 0.003 and 0.015 m^3/min (0.1 and 0.5 cfm). Adjust the sample flow rate proportionally to the stack flow during the test run (Section 5.2.1), and maintain a proportional sampling rate (within 10 percent of the desired value) and a filter holder temperature no greater than 120 °C (248 °F).

During the test run, make periodic adjustments to keep the temperature around the filter holder at the proper level. Add more ice to the impinger box and, if necessary, salt to maintain a temperature of less than 20 °C (68 °F) at the condenser/silica gel outlet.

If the pressure drop across the filter becomes too high, making sampling difficult to maintain, either filter may be replaced during a sample run. It is recommended that another complete filter assembly be used rather than attempting to change the filter itself. Before a new filter assembly is installed, conduct a leak-check (see Section 5.1.4.2). The total particulate weight shall include the summation of all filter assembly catches. The total time for changing sample train components shall not exceed 10 minutes. No more than one component change is allowed for any test run.

At the end of the test run, turn off the coarse adjust valve, remove the probe and nozzle from the stack, turn off the pump, record the final dry gas meter reading, and conduct a post-test leak-check, as outlined in Section 5.1.4.3.

5.3 Sample Recovery. Begin recovery of the probe and filter sample as described in Method 5, Section 4.2, except that an acetone blank volume of about 50 ml may be used. Treat the samples as follows:

Container No. 1. Carefully remove the filter from the front filter holder and place it in its identified petri dish container. Use a pair of tweezers and/or clean disposable surgical gloves to handle the filter. If it is necessary to fold the filter, do so such that the particulate cake is inside the fold. Carefully transfer to the petri dish any particulate matter and/or filter fibers which adhere to the filter holder gasket, by using a dry Nylon bristle brush and/or a sharp-edged blade. Seal and label the container.

Container No. 2. Remove the filter from the back filter holder using the same procedures as described above.

Container No. 3. Same as Method 5, Section 4.2 for Container No. 2, except that descriptions of capping and sample transport are not applicable if sample recovery and analysis occur in the same room.

Container No. 4. Treat the impingers as follows: Measure the liquid which is in the first three impingers to within 1 ml by using a graduated cylinder or by weighing it to within 0.5 g by using a balance (if one is available). Record the volume or weight of liquid present. This information is required to calculate the moisture content of the effluent gas.

Transfer the water from the first, second and third impingers to a glass container. Tighten the lid on the sample container so that water will not leak out. Rinse impingers and graduated cylinder, if used, with acetone three times or more. Avoid direct contact between the acetone and any stopcock grease or collection of any stopcock grease in the rinse solutions. Add these rinse solutions to sample Container No. 3.

Whenever possible, containers should be transferred in such a way that they remain upright at all times. Descriptions of capping and transport of samples are not applicable if sample recovery and analysis occur in the same room.

Container No. 5. Transfer the silica gel from the fourth impinger to its original container and seal. A funnel may make it easier to pour the silica gel without spilling. A rubber policeman may be used as an aid in removing the silica gel from the impinger. It is not necessary to remove the small amount of dust particles that may adhere to the impinger wall and are difficult to remove. Since the gain in weight is to be used for moisture calculations, do not use any water or other liquids to transfer the silica gel. If a balance is available, follow the procedure for Container No. 5 in Section 5.4.

5.4 Analysis. Record the data required on a sheet such as the one shown in Figure 5H-4. Handle each sample container as follows:

Containers No. 1 and 2. Leave the contents in the shipping container or transfer both of the filters and any loose particulate from the sample container to a tared glass weighing dish. Desiccate for no more than 36 hours. Weigh to a constant weight and report the results to the nearest 0.1 mg. For purposes of this Section, 5.6, the term "constant weight" means a difference of no more than 0.5 mg or 1 percent of total weight less tare weight, whichever is greater, between two consecutive weighings, with no less than 2 hours between weighings.

Container No. 3. Note the level of liquid in the container and confirm on the analysis sheet whether leakage occurred during transport. If a noticeable amount of leakage has occurred, either void the sample or use methods, subject to the approval of the Administrator, to correct the final results. Determination of sample leakage is not applicable if sample recovery and analysis occur in the same room. Measure the liquid in this container either volumetrically to within 1 ml or gravimetrically to within 0.5 g. Transfer the contents to a tared 250-ml or smaller beaker, and evaporate to dryness at ambient temperature and pressure. Desiccate and weigh to a constant weight. Report the results to the nearest 0.1 mg.

Container No. 4. Note the level of liquid in the container and confirm on the analysis sheet whether leakage occurred during transport. If a noticeable amount of leakage has occurred, either void the sample or use methods, subject to the approval of the Administrator, to correct the final results. Determination of sample leakage is not applicable if sample recovery and analysis occur in the same room. Measure the liquid in this container either volumetrically to within 1 ml or gravimetrically to within 0.5 g. Transfer the contents to a 500 ml or larger separatory funnel. Rinse the container with water, and add to the separatory funnel. Add 25 ml of dichloromethane to the separatory funnel, stopper and vigorously shake 1 minute, let separate and transfer the dichloromethane (lower layer) into a tared beaker or evaporating dish. Repeat twice more. It is necessary to rinse the Container No. 4 with dichloromethane. This rinse is added to the impinger extract container. Transfer the remaining water from the separatory funnel to a tared beaker or evaporating dish and evaporate to dryness at 220 °F (105 °C). Desiccate and weigh to a constant weight. Evaporate the combined impinger water extracts at ambient temperature and pressure. Desiccate and

weigh to a constant weight. Report both results to the nearest 0.1 mg.

Container No. 5. Weigh the spent silica gel (or silica gel plus impinger) to the nearest 0.5 g using a balance.

"Acetone Blank" Container. Measure acetone in this container either volumetrically or gravimetrically. Transfer the acetone to a tared 250-ml or smaller beaker, and evaporate to dryness at ambient temperature and pressure. Desiccate and weigh to a constant weight. Report the results to the nearest 0.1 mg.

"Dichloromethane" Container. Measure 75 ml of dichloromethane in this container and treat it the same as the "acetone blank."

"Water Blank" Container. Measure 200 ml water into this container either volumetrically or gravemetrically. Transfer the water to a tared 250-ml beaker and evaporate to dryness at 105 °C (221 °F). Desiccate and weigh to a constant weight.

6. Calibration

Maintain a laboratory record of all calibrations.

6.1 Volume Metering System.

6.1.1 Initial and Periodic Calibration. Before the first certification or audit test and at least semiannually, thereafter, calibrate the volume metering system as described in Method 5G, Section 5.2.1.

6.1.2 Calibration After Use. Same as Method 5G, Section 5.2.2.

6.1.3 Acceptable Variation in Calibration. Same as Method 5G, Section 5.2.3.

6.2 Probe Heater Calibration. (Optional) The probe heating system shall be calibrated before the first certification or audit test. Use the procedure described in Method 5, Section 5.4.

6.3 Temperature Gauges. Use the procedure in Method 2, Section 4.3, to calibrate in-stack temperature gauges before the first certification or audit test and semiannually, thereafter.

6.4 Leak-Check of Metering System Shown in Figure 5H-1. That portion of the sampling train from the pump to the orifice meter shall be leak-checked after each certification or audit test. Use the procedure described in Method 5, Section 5.6.

6.5 Barometer. Calibrate against a mercury barometer before the first certification test and semiannually, thereafter. If a mercury barometer is used, no calibration is necessary. Follow the manufacturer's instructions for operation.

6.6 SO_2 Injection Rotameter. Calibrate the SO_2 injection rotameter system with a soap film flowmeter or similar direct volume measuring device with an accuracy of ± 2 percent. Operate the rotameter at a single reading for at least three calibration runs for 10 minutes each. When three consecutive calibration flow rates agree within 5 percent, average the three flow rates, mark the rotameter at the calibrated setting, and use the calibration flow rate as the SO_2 injection flow rate during the test run. Repeat the rotameter calibration before the first certification test and semiannually, thereafter.

6.7 Analyzer Calibration Error Check. Conduct the analyzer calibration error check prior to each certification test.

6.7.1 Calibration Gas Injection. After the flow rate measurement system and the tracer gas measurement system have been prepared for use (Sections 5.1.5.2 and 5.1.6), introduce zero gases and then the mid-level calibration gases for each analyzer. Set the analyzers' output responses to the appropriate levels. Then introduce the low-level and high-level calibration gases, one at a time, for each analyzer. Record the analyzer responses.

6.7.2 Acceptability Values. If the linear curve for any analyzer determined from the zero and mid-level calibration gases' responses does not predict the actual responses of the low-level and high-level gases within 2 percent of the span value, the calibration of that analyzer shall be considered invalid. Take corrective measures on the measurement system before repeating the calibration error check and proceeding with the test runs.

6.8 Measurement System Response Time. Introduce zero gas at the calibration gas valve into the flow rate measurement system and the tracer gas measurement system until all readings are stable. Then, quickly switch to introduce the mid-level calibration gas at the calibration value until a stable value is obtained. A stable value is equivalent to a change of less than 1 percent of span value for 30 seconds. Record the response time. Repeat the procedure three times. Conduct the response time check for each analyzer separately before its initial use and at least semiannually thereafter.

6.9 Measurement System Drift Checks. Immediately prior to the start of each test run (within 1 hour of the test run start), introduce zero and mid-level calibration gases, one at a time, to each analyzer through the calibration valve. Adjust the analyzers to respond appropriately. Immediately following each test run (within 1 hour of the end of the test run), or if adjustments to the analyzers or measurement systems are required during the test run, reintroduce the zero- and mid-level calibration gases and record the responses, as described above. Make no adjustments to the analyzers or the measurement system until after the drift checks are made.

If the difference between the analyzer responses and the known calibration gas values exceed the specified limits (Sections 4.2 and 4.3), the test run will be considered invalid and shall be repeated following corrections to the measurement system. Alternatively, recalibrate the measurement system and recalculate the measurement data. Report the test run results using both the initial and final calibration data.

6.10 Analytical Balance. Perform a multipoint calibration (at least five points spanning the operational range) of the analytical balance before the first certification test and semiannually, thereafter. Before each certification test, audit the balance by weighing at least one calibration weight (class F) that corresponds to 50 to 150 percent of the weight of one filter. If the scale cannot reproduce the value of the calibration weight to within 0.1 mg, conduct the multipoint calibration before use.

7. Calculations

Carry out calculations, retaining at least one extra decimal figure beyond that of the acquired data. Round off figures after the final calculation. Other forms of the equations may be used as long as they give equivalent results.

7.1 Nomenclature.

a = Sample flow rate adjustment factor.

BR = dry wood burn rate, kg/hr (lb/hr), from Method 28, Section 8.3.

B_{ws} = Water vapor in the gas stream, proportion by volume.

c_s = Concentration of particulate matter in stack gas, dry basis, corrected to standard conditions, g/dsm³ (g/dscf).

E = Particulate emission rate, g/hr.

ΔH = Average pressure differential across the orifice meter (see Figure 5H-1), mm H_2O (in. H_2O).

L_a = Maximum acceptable leakage rate for either a post-test leak check or for a leak-check following a component change; equal to 0.00057 m³/min (0.02 cfm) or 4 percent of the average sampling rate, whichever is less.

L_i = Individual leakage rate observed during the leak-check conducted before a component change, m³/min (cfm).

L_p = Leakage rate observed during the post-test leak-check, m³/min (cfm).

m_a = Total amount of particulate matter collected, mg.

m_s = Mass of residue of solvent after evaporation, mg.

N_C = Gram atoms of carbon/gram of dry fuel (lb/lb), equal to 0.0425.

N_T = Total dry moles of exhaust gas/Kg of dry wood burned, g-moles/kg (lb-moles/lb).

PR = Percent of proportional sampling rate.

P_{bar} = Barometric pressure at the sampling site, mm Hg (in. Hg).

P_{std} = Standard absolute pressure, 760 mm Hg (29.92 in. Hg).

Q_{sd} = Total gas flow rate, dsm³/hr (dscf/hr).

Q_T = Flow of tracer gas, liters/min.

S_i = Concentration measured at the SO_2 analyzer for the "i^{th}" 10 minute interval, ppm.

S_1 = Concentration measured at the SO_2 analyzer for the first 10-minute interval, ppm.

T_1 = Absolute average stack gas temperature for the first 10-minute interval, ° K (° R).

T_i = Absolute average stack gas temperature at the "i^{th}" 10-minute interval, ° K (° R).

T_m = Absolute average dry gas meter temperature (see Figure 5H-3), ° K (° R).

T_{std} = Standard absolute temperature, 293 ° K (528 ° R).

V_s = volume of solvent blank, ml.

V_{sw} = Volume of solvent used in wash, ml.

V_w = Total volume of liquid collected in impingers and silica gel (see Figure 5H-4), ml.

V_m = Volume of gas sample as measured by dry gas meter, dm³ (dcf).

$V_{m(std)}$ = Volume of gas sample measured by the dry gas meter, corrected to standard conditions, dm³ (dscf).

$V_{m(1)}$ = Volume of gas sample measured by the dry gas meter during the first 10-minute interval, corrected to standard conditions, dm³ (dscf).

$V_{m(i)}$ = Volume of gas sample measured by the dry gas meter during the "i^{th}" 10-minute interval, dm³ (dscf).

$V_{w(std)}$ = Volume of water vapor in the gas sample, corrected to standard conditions, sm^3 (scf).
W_a = Weight of residue in solvent wash, mg.
Y = Dry gas meter calibration factor.
Y_{CO} = Measured mole fraction of CO (dry), average from Section 5.2.2.2, g/g-mole (lb/lb-mole).
Y_{CO_2} = Measured mole fraction of CO_2 (dry), average from Section 5.2.2.2, g/g-mole (lb/lb-mole).
Y_{HC} = Assumed mole fraction of HC (dry), g/g-mole (lb/lb-mole):
= 0.0088 for catalytic wood heaters;
= 0.0132 for non-catalytic wood heaters;
= 0.0080 for pellet-fired wood heaters.
10 = Length of first sampling period, minutes.
13.6 = Specific gravity of mercury.
100 = Conversion to percent.
θ = Total sampling time, min.
θ_i = Sampling time interval, from the beginning of a run until the first component change, min.

7.2 Average dry gas meter temperature and average orifice pressure drop. See data sheet (Figure 5H-3).

7.3 Dry Gas Volume. Correct the sample volume measured by the dry gas meter to standard conditions (20 °C, 760 mm Hg or 68 °F, 29.92 in. Hg) by using Equation 5H-1.

$$V_{m(std)} = V_m Y \frac{T_{std}}{T_m}\left(\frac{P_{bar} + \frac{\Delta H}{13.6}}{P_{std}}\right) = K_1 V_m Y\left(\frac{P_{bar} + (\Delta H/13.6)}{T_m}\right) \quad \text{Eq. 5H-1}$$

where:
K_1 = 0.3858 °K/m. Hg for metric units.
= 17.64 °R/in. Hg for English units.

Note: Equation 5H-1 can be used as written unless the leakage rate observed during any of the mandatory leak-checks (i.e., the post-test leak-check or leak-check conducted before a component change) exceeds L_a.

If L_p exceeds L_a, Equation 5H-1 must be modified as follows:

(a) Case I. No component changes made during sampling run. In this case, replace V_m in Equation 5H-1 with the expression:
$[V_m - (L_p - L_a)\theta]$

(b) Case II. One component change made during the sampling run. In this case, replace V_m in Equation 5H-1 by the expression:
$V_m - (L_i - L_a)\theta_i$
and substitute only for those leakage rates (L_i or L_p) which exceed L_a.

7.4 Volume of Water Vapor.

$V_{w(std)} = K_2 V_{lc}$ Eq. 5H-2

where:
K_2 = 0.001333 m^3/ml for metric units
= 0.04707 ft^3/ml for English units.

7.5 Moisture Content.

$$B_{ws} = \left(\frac{V_{w(std)}}{V_{m(std)} + V_{w(std)}}\right) \quad \text{Eq. 5H-3}$$

7.6 Solvent Wash Blank.

$$W_a = \left(\frac{m_a V_{aw}}{V_a}\right) \quad \text{Eq. 5H-4}$$

7.7 Total Particulate Weight. Determine the total particulate catch from the sum of the weights obtained from containers 1, 2, 3, and 4 less the appropriate solvent blanks (see Figure 5H-4).

Note: Refer to Method 5, Section 4.1.5 to assist in calculation of results involving two filter assemblies.

7.8 Particulate Concentration.

$c_s = (0.001\ g/mg)\ (m_n/V_{m(std)})$ Eq. 5H-5

7.9 Sample Flow Rate Adjustment.

$$s = \frac{S_i}{S_1} \quad \text{Eq. 5H-6}$$

7.10 Carbon Balance for Total Moles of Exhaust Gas (dry)/Kg of Wood Burned in the Exhaust Gas.

$$N_T = \left(\frac{K_3 N_C}{(Y_{CO_2} + Y_{CO} + Y_{HC})}\right) \quad \text{Eq. 5H-7}$$

where:
K_3 = 1000 g/kg for metric units.
K_3 = 1.0 lb/lb for English units.

Note: The NO_x/SO_x portion of the gas is assumed to be negligible.

7.11 Total Stack Gas Flow Rate.

$Q_{sd} = K_4 N_T BR$ Eq. 5H-8

where:
K_4 = 0.02406 for metric units, dam^3/g-mole.
= 384.8 for English units, dscf/lb-mole.

7.12 Particulate Emission Rate.

$E = c_s Q_{sd}$ Eq. 5H-9

7.13 Proportional Rate Variation. Calculate PR for each 10-minute interval, i, of the test run.

$$PR = \left(\frac{\theta\ S_1\ V_{mi(std)}}{10 \sum_{i=1}^{n} [S_1\ V_{mi(std)}]}\right) \times 100 \quad \text{Eq. 5H-10}$$

7.14 Acceptable Results. If no more than 15 percent of the PR values for all the intervals exceed 80 percent < PR < 110 percent, and if no PR value for any interval exceeds 75 < PR < 125 percent, the results are acceptable. If the PR values for the test runs are judged to be unacceptable, report the test run emission results, but do not include the test run results in calculating the weighted average emission rate, and repeat the test.

8. Bibliography

1. Same as for Method 5, citations 1 through 11, with the addition of the following:

2. Oregon Department of Environmental Quality Standard Method for Measuring the emissions and efficiencies of Woodstoves, July 8, 1984. Pursuant to Oregon Administrative Rules Chapter 340, Division 21.

3. American Society for Testing Materials Proposed Test Methods for Heating Performance and Emissions of Residential Wood-fired Closed Combustion-Chamber Heating Appliances, E-6 Proposal P 180, August 1986.

BILLING CODE 6560-50-M

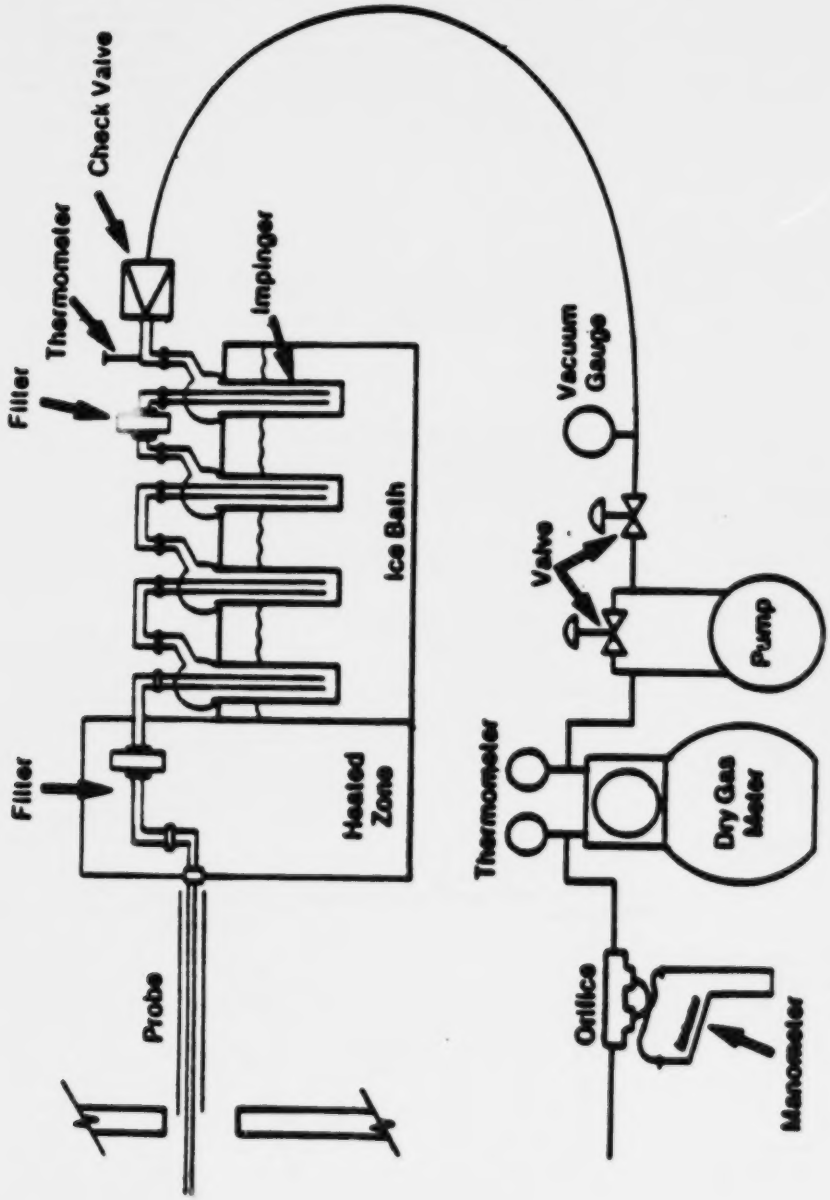

Figure SH-1. Sampling train.

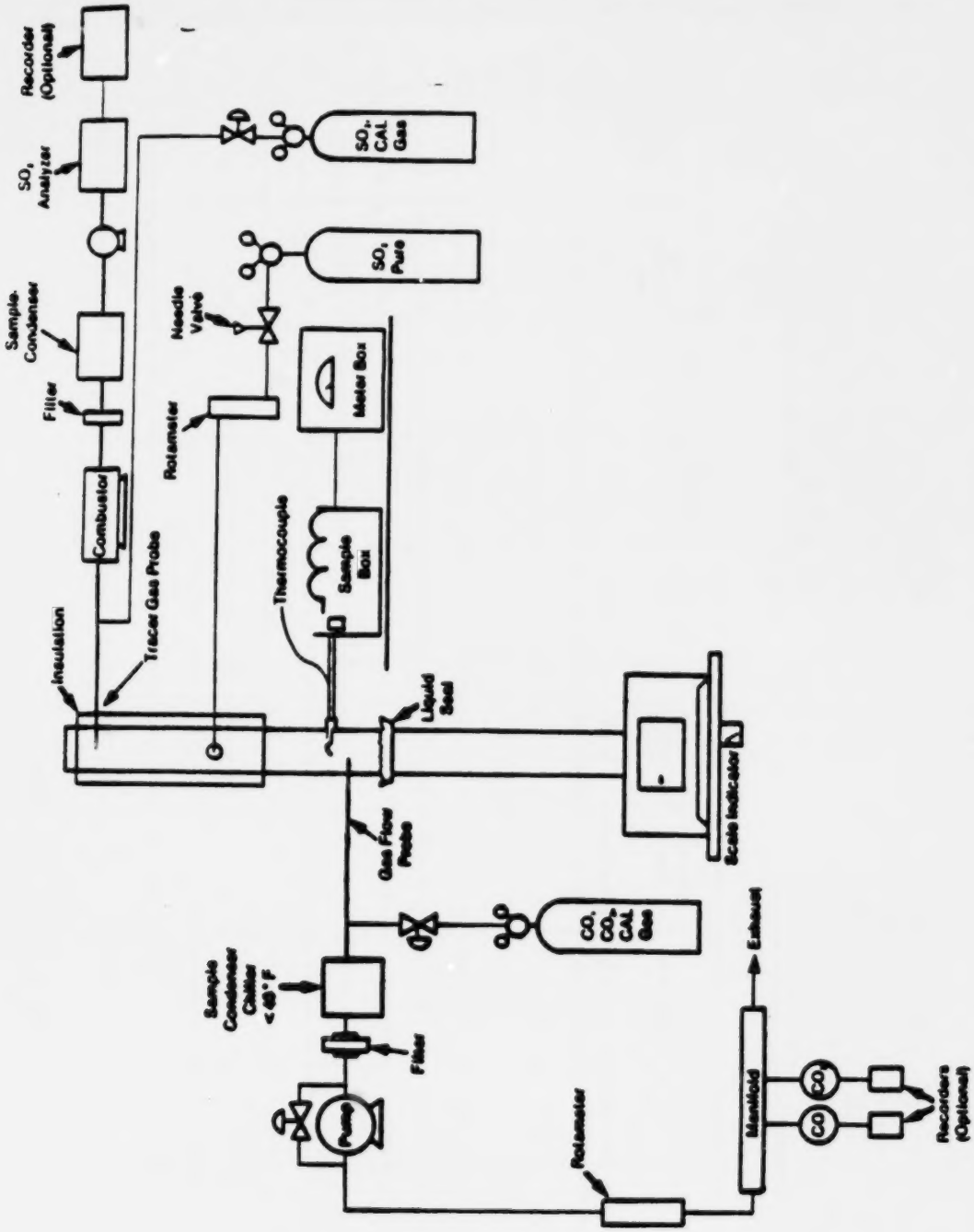

Figure 5H-2. Test system schematic for Method 5H.

Stove _____
Test Method _____
Operator _____
Date _____
Run No _____
Start Time _____
Stop Time _____
Sample Box No _____
Meter Box No _____
Meter ΔH @ (optional) _____
C Factor _____

Pitot tube coefficient, C_p _____
Room temperature, °C, (°F) _____
Barometric pressure mb (in. Hg) _____
Measured or assumed moisture, % _____
Nozzle identification No. _____
Average calibrated nozzle diameter, mm (in.) _____
Final leak rate, m³/min, (cfm) _____
Probe liner material _____
Draft or static pressure, mm H_2O (in. H_2O) _____
Filter Nos. _____

Clock time	Sampling time (θ) min.	Vacuum mm Hg (in. Hg)	Flue temperature (T_s) °C (°F)	Flow in Flue m³/min (ft³/min)	Volume sampled in period m³ (ft³)	Gas sample volume m³ (ft³)	Gas sample temperature at dry gas meter °C (°F)	°C (°F)	Front filter holder temperature °C (°F)	Temperature of gas leaving dryer or last impinger °C (°F)
Total							Avg	Avg		
Average							Avg			

Figure 5H-3. Data sheet.

Stove _____
Date _____
Run No. _____
Filter Nos. _____
Amount liquid lost during transport (ml) _____
Acetone blank volume, ml _____
Acetone wash volume, ml _____
Acetone blank concentration, mg/ml _____
Acetone wash blank, mg _____

Dichloromethane blank volume, ml _____
Dichloromethane wash volume, ml _____
Dichloromethane blank concentration, mg/ml _____
Dichloromethane wash blank, mg _____
Water blank volume, ml _____
Water wash volume, ml _____
Water blank concentration, mg/ml _____
Water wash blank, mg _____

Container number	Weight of particulate collected, mg		
	Final weight	Tare weight	Weight gain
1 _____			
2 _____			
3 _____			
4 _____			
5 _____			
Total _____			
Less acetone blank _____			
Less dichloromethane blank _____			
Less water blank _____			
Weight of particulate matter _____			

	Volume of liquid water collected	
	Impinger volume, ml	Silica gel weight, g
Final _____		
Initial _____		
Liquid collected _____		
Total volume collected _____		g* ml

*Convert weight of water to volume by dividing total weight increase by density of water (1 g/ml).

$$\frac{\text{Increase, g}}{(1\ \text{g/ml})} = \text{Volume water, ml}$$

Figure 5H-4. Analysis data sheet.

BILLING CODE 6560-50-C

11.0 REFERENCES

1. Standards of Performance for New Stationary Sources, Federal Register, Volume 42, No. 160. August 18, 1977.

2. Martin, R. M. Construction Details of Isokinetic Source Sampling Equipment. Publication No. APTD-0581. Air Pollution Control Office, U. S. Environmental Protection Agency, Research Triangle Park, North Carolina. 1971.

3. Rom, J. J. Maintenance, Calibration, and Operation of Isokinetic Source Sampling Equipment. Publication No. APTD-0576. Office of Air Programs, U. S. Environmental Protection Agency, Research Triangle Park, North Carolina. 1972.

4. Quality Assurance Handbook for Air Pollution Measurement Systems, Volume III, Stationary Source Specific Methods. U. S. Environmental Protection Agency, Office of Research and Development, Environmental Monitoring and Support Laboratory, Research Triangle Park, North Carolina. EPA-600/4-77-0276. August 1977.

5. Method for Evaluation of Air Assay Media by the Monodisperse DOP (Dioctyl Phthalate) Smoke Test. ASTM-D2986-71(1978). 11.03. Philadelphia, Pennsylvania. 1978.

6. Specification for Reagent Water. ASTM-D1193-77(1983). 11.01. Philadelphia, Pennsylvania. 1983.

7. Metric Practice. ASTM-E380-85. 14.02. Philadelphia, Pennsylvania. 1985.

12.0 DATA SHEETS

Blank data sheets are provided in the following pages for the convenience of the user of this manual to aid in calculations, record keeping, and data reporting. Use of these sheets will help ensure that all the calculations and the reporting of the test data are done correctly. It is suggested that the sheets be removed for duplication and then the originals returned to this manual for future reference. For discussion of the procedures for using the sheets, the reader is referred to the previous sections where example calculations or example applications are provided. The identification number before the sheet title refers to the section of this Manual where the sheet is explained. For example, Sheet 5G-2.6 indicates that an example sheet is found in Figure 2.6, located in Section 2.0 of this manual.

Sheet	Title
1.1	Procurement Log
2.6	Type S Pitot Tube Inspection Data Sheet
2.10	Pitot Tube Calibration Data Sheet
2.13	Stack Temperature Sensor Calibration Data Sheet
2.15	Differential Pressure Gauge Calibration Data Sheet
2.18	Wet Test Meter Calibration Log
2.20	Dry Gas Meter Calibration Data Sheet (English Units)
2.21	Post-Test Dry Gas Meter Calibration Data Sheet (English Units)
3.1	Precertification Series Checklist
3.3	Pretest Run Dilution Tunnel Traverse
3.5	Data Sheet for Gravimetric Determinations (Method 5G-1)
3.6	Pretest Run Data Sheet (Methods 5G-1 and 5G-2)
3.8	Data Sheet for Method 5G-2 Gravimetric Determinations
3.10	Data Sheet for Method 5G-3 Gravimetric Determinations
3.11	Pretest Run Data Sheet (Method 5G-3)
4.1	Sampling Data Sheet 5G
8.1	Method 5 Checklist to Be Used by Auditors

Item Description	Quantity	Purchase Order Number	Vendor	Date		Cost	Dispo-sition	Comments
				Ordered	Received			

Figure 12.1. Sheet 5G-1.1 - Procurement Log

Pitot tube assembly level ? yes ☐ no ☐

Pitot tube openings damaged ? yes (explain below) ☐ no ☐

α_1 = _____ °(<10°), α_2 = _____ °(<10°), β_1 = _____ °(<5°), β_2 = _____ °(<5°)

γ = _____ °, θ = _____ °, A = _____ cm (inches)

z = A sin γ = _____ cm (inches); <0.32 cm (<1/8 inches),

w = A sin θ = _____ cm (inches); <0.08 cm (<1/32 inches),

P_A _____ cm (inches), P_b _____ cm (inches), D_t = _____ cm (inches)

Comments: _____

_____

_____

_____

_____

_____

_____

Calibration required ? yes ☐ no ☐

Figure 12.2. Sheet 5G-2.6 - Type S Pitot Tube Inspection Data Sheet

Calibration Pitot Tube: type _____ size (OD) _____ ID number _____

Type S Pitot Tube ID Number _____ $C_{p(std)}$ = _____

Calibration: date _____ performed by _____

A · Side Calibration			
$\Delta p_{std}'$ cm (in.) H_2O	$\Delta p_s'$ cm (in.) H_2O	$C_{p(s)}$ [a]	DEV. [b]
	Average		

B · Side Calibration			
$\Delta p_{std}'$ cm (in.) H_2O	$\Delta p_s'$ cm (in.) H_2O	$C_{p(s)}$ [a]	DEV. [b]
	Average		

[a] $C_{p(s)} = C_{p(std)}\sqrt{\frac{\Delta p_{std}}{\Delta p_s}}$ = _____

[b] DEV = $C_{p(S)} - C_p$, (must be ≤ 0.01)

$C_p(A) - C_p(B)$ = _____ (must be ≤ 0.01)

Figure 12.3. Sheet 5G-2.10 - Pitot Tube Calibration Data Sheet

Temperature Monitor Type _____ Test Facility _____

Identification Number _____ Calibration Performed By _____

Date _____

Reference Temperature Monitor Type _____

Identification Number _____ Ambient Temperature _____

Readout Device _____ Barometric Pressure _____

Reference Point Source[1]	Temperature of Reference Point[2] **A**	Observed Temperature	Difference in Percent of Absolute Temperature[3]
		Temperature Monitor **B**	

[1]Reference Points include ice-bath, boiling water, furnace, etc...
[2]Boiling Point H_2O in °C = 100 − 0.94(29.92 − Barometric Pressure in inches Hg)
Boiling Point H_2O in °F = 212 − 1.69(29.92 − Barometric Pressure in inches Hg)

[3]Difference in Percent Absolute = $\left(\frac{A - B}{A + 273}\right) \times 100$, for A and B in °C; $\left(\frac{A - B}{A + 460}\right) \times 100$, for A and B on °F

Figure 12.4. Sheet 5G-2.13 - Stack Temperature Sensor Calibration Data Sheet

Gauge Type _____ Serial or ID Number _____ Range _____

Resolution _____ Calibration _____ Initial _____ Posttest

Date Calibrated _____ Calibrated By _____

Gauge-Oil Manometer Δ_p	Differential Pressure Gauge Δ_p	Pressure Difference %

Figure 12.5. Sheet 5G-2.15 - Differential Pressure Gauge Calibration Data Sheet

Wet test meter serial number _____ Date _____ Operator _____

Range of wet test meter flow rate _____ Volume of test flask V_s= _____

Satisfactory leak check ? ☐ Ambient temperature of equilibrated liquid in wet test meter and reservoir _____

Test Number	Manometer Reading,[a] mm H_2O	Final Volume (V_f), ℓ	Initial Volume (V_i), ℓ	Total Volume (V_m)[b], ℓ	Flask Volume (V_s), ℓ	Percent Error,[c] %
1						
2						
3						

[a]Must be less than 10 mm (0.4 inches) H_2O

Calculations

[b]$V_m = V_f - V_i$

[c]% error = $100\,(V_m - V_s)/V_s$ = _____ (± 1%)

Figure 12.6. Sheet 5G-2.18 - Wet Test Meter Calibration Log

Meter Box Calibration Data and Calculation Form
(English Units)

Date _____ Meter Box Number _____

Barometric Pressure, P_b = _____ in. Hg Calibrated by _____

Rotameter or Orifice Manometer Setting (ΔH), in. H_2O	Gas Volume		Temperatures				Time (θ), min	Y_i	Rotameter Ball Reading or $\Delta H@_i$ in. H_2O
	Reference Test Meter (V_w), ft^3	Dry Gas Meter (V_d), ft^3	Reference Test Meter (t_w), °F	Dry Gas Meter Inlet (t_{d_i}), °F	Dry Gas Meter Outlet (t_{d_o}), °F	Dry Gas Meter Avg[a] (t_d), °F			
							Avg		

ΔH, in. H_2O	$\frac{\Delta H}{13.6}$,	$Y_i = \frac{V_w P_b (t_d + 460)}{V_d (P_b + \frac{\Delta H}{13.6})(t_w + 460)}$

[a] If there is only one thermometer on the dry gas meter, record the temperature under t_d

Figure 12.7. Sheet 5G-2.20 - Dry Gas Meter Calibration Data Sheet (English Units)

Test Numbers _____ Date _____ Wood Heater _____

Barometric Pressure, P_b = _____ in. Hg Dry Gas Meter Number _____ Pretest Y _____

Rotameter or Orifice Manometer Setting, (ΔH), in. H_2O	Gas Volume		Temperature				Time (Θ), min	Vacuum Setting, in. Hg	Y_i	$Y_i = \frac{V_w P_b (t_d + 460)}{V_d \left(P_b + \frac{\Delta H}{13.6}\right)(t_w + 460)}$
	Reference Test Meter (V_w), ft^3	Dry Gas Meter (V_d), ft^3	Reference Test Meter (t_w), °F	Dry Gas Meter						
				Inlet (t_{di}), °F	Outlet (t_{do}), °F	Average* (t_d), °F				
									Y =	

* If there is only one thermometer on the dry gas meter, record the temperature under t_d

V_w = Gas volume passing through the reference test meter, ft^3

V_d = Gas volume passing through the dry gas meter, ft^3

t_w = Temperature of the gas in the reference test meter, F°

t_{di} = Temperature of the inlet gas of the dry gas meter, °F

t_{do} = Temperature of the outlet gas of the dry gas meter, °F

t_d = Average temperature of the gas in the dry gas meter, obtained by the average of t_{di} and t_{do}, °F

ΔH = Pressure differential across orifice or dry gas meter, in. H_2O

Y_i = Ratio of accuracy of reference test meter to dry gas meter for each run

Y = Average ratio of accuracy of reference test meter to dry gas meter for all three runs; tolerance = pretest Y ± 0.05Y

P_b = Barometric pressure, in. Hg

Θ = Time of calibration run, min

Figure 12.8. Sheet 5G-2.21 - Post-Test Dry Gas Meter Calibration Data Sheet (English Units)

Activity	Acceptable Yes	Acceptable No
Dilution Tunnel		
1. Has the dilution tunnel been cleaned immediately before the certification series?	____	____
2. Is the dilution tunnel reassembled leak-free and are all dimensions and specifications met?	____	____
Analytical Balance		
3. Has the balance been calibrated within the last 6 months?	____	____
4. Are calibration records available and compiled?	____	____
5. Has a single point calibration check been performed and does the balance reproduce the weight within 0.1 mg?	____	____
Pitot Tube		
6. Has Type S pitot tube been checked and calibrated within the last 6 months?	____	____
7. Has standard pitot tube been cleaned and inspected immediately before the certification series?	____	____

General Comments

Figure 12.9. Sheet 5G-3.1 - Precertification Series Checklist

Activity	Acceptable Yes	Acceptable No
Volume Metering System		
8. Has the metering system been calibrated within the last 6 months?	____	____
9. Are calibration records available and compiled?	____	____
10. Was the most recent single point metering system check acceptable?	____	____
Temperature Monitors		
11. Have all temperature monitors and readouts been calibrated within the last 6 months?	____	____
12. Are calibration records available and compiled?	____	____

General Comments

Figure 12.9. Sheet 5G-3.1 (Continued)

Wood Heater Model _____ Date _____

Run # _____ Operator _____

Barometric Pressure (P_{bar}) _____ Static Pressure (P_g) _____

Inside Diameter: Port A _____ Port B _____

Tunnel Cross Sectional Area: _____

Pitot Tube Type: Std or Type S _____

Pitot Tube ID Number: _____

Traverse Point	Position (inches)	Velocity Head Δ_P (in. H_2O)	Tunnel Temperature (°F)	$\sqrt{\Delta_p}$
A - 1	0.40			
A - 2	1.50			
A - 3	4.50			
A - 4	5.60			
B - 1	0.40			
B - 2	1.50			
B - 3	4.50			
B - 4	5.60			
		Average		

$$V_s = K_p C_p \left(\sqrt{\Delta_p} \right) \text{avg} \sqrt{\frac{T_s}{P_s M_s}}$$

where,

C_P = pitot tube coefficient, dimensionless
= 0.99 for standard pitot
= 0.84 for Type S

Δ_P = manometer reading (in. H_2O)

T_S = average absolute dilution tunnel (°F + 460), (°C + 273)

P_s = absolute dilution tunnel gas pressure or $P_{bar} + P_g$

P_g = static pressure $\left(\frac{\text{in } H_2O}{13.6} \right)$

M_s = 28.56, wet molecular weight of stack gas (alternatively, it may be measured

K_p = 85.49 pitot tube constant, (conversion factor for english units)
= 34.97 (conversion factor for metric units)

$\left(\sqrt{\Delta_p} \right)$ avg = Average of the square roots of the velocity heads (Δ_p) measured at each traverse point

Figure 12.10. Sheet 5G-3.3 - Pre Test Run Dilution Tunnel Traverse

Traverse Point	Position (inches)	Velocity Head Δp (in. H_2O)	Tunnel Temperature (°F)	$\sqrt{\Delta_p}$
A - Centroid	3.00			
B - Centroid	3.00			
				Average ($\sqrt{\Delta_p}$) centroid = _____

Adjustment Factor for Alternative Pitot Tube Placement:

$$F_p = \frac{(\sqrt{\Delta_p})_{avg}}{\overline{(\sqrt{\Delta_p})_{centroid}}}$$

where,

$(\sqrt{\Delta_p})_{avg}$ = Average of the square roots of the velocity heads measured at each traverse point, inches of H_2O

$\overline{(\sqrt{\Delta_p})_{centroid}}$ = Average of the square roots of the velocity heads measured at the tunnel centroid, inches of H_2O

$\Delta_{p(sp)}$ = Δ_p measured at tunnel centroid during testing

Adjustment Factor Application:

$$V_s = K_p C_p F_p (\sqrt{\Delta_{p(sp)}})_{average} \sqrt{\frac{T_s}{P_s M_s}}$$

Cross Sectional Sketch of Dilution Tunnel Showing Ports and Pitot Tube Placement

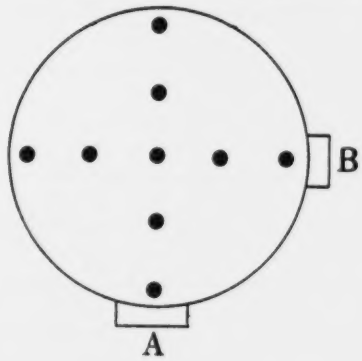

Figure 12.10. Sheet 5G-3.3 (Continued)

Date _____ Analyst _____ Run # _____

Desiccator # _____ Indicator/Condition _____ Air Flow/Condition _____

Filter Type _____ Acetone Recovery Solvent (Lot #) _____

PRETEST WEIGHTS

Action	Time/Date	Beaker #	Beaker #	Front Filter #	Back Filter #	Filter Blank #	Room Conditions	
							Temp.(°F)	Rel. Hum.(%)

POST-TEST WEIGHTS

Action	Time/Date	Beaker # Contents: Vol: Beaker	Beaker # Contents: Vol: Beaker	Front Filter #	Back Filter #	Filter Blank #	Room Conditions	
							Temp.(°F)	Rel. Hum.(%)

Filter WT blank must agree to within 1.0 mg

Front filter WT post _____ − filter WT pre _____ = _____

Back filter WT post _____ − filter WT pre _____ = _____

Beaker WT post _____ − beaker WT pre _____ = _____

[Blank WT ÷ vol. rinse × vol. beaker] _____

Figure 12.11. Sheet 5G-3.5 - Data Sheet for Gravimetric Determinations (Method 5G-1)

Run Number _____

Date _____ Operator _____

Wood Heater

Manufacturer _____

Model _____

Facility Conditions

Barometric Pressure _____

Air Velocity _____

Room Temperature _____

Relative Humidity _____

Wood Heater Conditions

Date Wood Heater Stack Cleaned _____

Date Dilution Tunnel Cleaned _____

Balance Check _____

Induced Draft Check _____

Heater Weight Check _____

Liquid Seal Check _____

Wood Load _____

Pretest Weight _____

Flow Rate 140 cfm ± 10% _____

Velocity Factor _____

Pitot Leak Check

Side A _____

Side B _____

Pitot Tube

ID Number _____

Type _____

Identifications

Thermocouples ID No. _____

Top _____

Bottom _____

Right Side _____

Left Side _____

Back _____

Catalyst _____

Flue _____

Room _____

Dilution Tunnel _____

Sampling Train Leak Check _____

Sampling Train ID Numbers

Dry Gas Meter _____

Rotameter _____

Probe _____

Filter Front _____

Filter Back _____

Filter Thermocouple _____

Train Exit Thermometer _____

Figure 12.12. Sheet 5G-3.6 - Pre Test Run Data Sheet (Methods 5G-1 and 5G-2)

Date _____ Analyst _____ Run # _____

Desiccator# _____ Indicator/Condition _____ Air Flow/Condition _____

Filter Type _____ Acetone Recovery Solvent(Lot #) _____

Dichloromethane Extraction Solvent (Lot #) _____

PRETEST WEIGHTS

Action	Time/Date	Beaker #	Beaker #	Beaker #	Front Filter #	Back Filter #	Filter Blank #	Acetone Blank	Water Blank	Dichloromethane Blank	Room Conditions		Single Point Balance Check
											Temp.(°F)	Rel. Hum.(%)	

POST-TEST WEIGHTS

Action	Time/Date	Beaker # Contents Vol:	Beaker # Contents Vol:	Beaker # Contents Vol:	Front Filter #	Back Filter #	Filter Blank #	Acetone Blank	Water Blank	Dichloromethane Blank	Room Conditions		Single Point Balance Check
											Temp.(°F)	Rel. Hum.(%)	

Figure 12.13. Sheet 5G-3.8 - Data Sheet for Method 5G-2 Gravimetric Determinations

Date _____ Analyst _____ Run# _____ Desiccator # _____

Indicator/Condition _____ Air Flow/Condition _____ Filter Type _____

PRETEST WEIGHTS

Action	Time/Date	Train A			Train B			Blank Train			Room Conditions		Single Point Balance Check
		Front Filter #	Back Filter #	Probe & Filter Holder Assembly	Front Filter #	Back Filter #	Probe & Filter Holder Assembly	Front Filter #	Back Filter #	Probe & Filter Holder Assembly	Temp.(°F)	Rel. Hum.(%)	

POST-TEST WEIGHTS

Action	Time/Date	Train A			Train B			Blank Train			Room Conditions		Single Point Balance Check
		Front Filter #	Back Filter #	Probe & Filter Holder Assembly	Front Filter #	Back Filter #	Probe & Filter Holder Assembly	Front Filter #	Back Filter #	Probe & Filter Holder Assembly	Temp.(°F)	Rel. Hum.(%)	

Figure 12.14. Sheet 5G-3.10 - Data Sheet for Method 5G-3 Gravimetric Determinations

Run Number _____

Date _____ Operator _____

Wood Heater

Manufacturer _____

Model _____

Facility Conditions

Barometric Pressure _____

Air Velocity _____

Room Temperature _____

Relative Humidity _____

Wood Heater Conditions

Date Wood Heater Stack Cleaned _____

Date Dilution Tunnel Cleaned _____

Balance Check _____

Induced Draft Check _____

Heater Weight Check _____

Liquid Seal Check _____

Wood Load _____

Pretest Weight _____

Flow Rate 140 cfm ± 10% _____

Velocity Factor _____

Identifications

Thermocouples ID No. _____

- Top _____
- Bottom _____
- Right Side _____
- Left Side _____
- Back _____
- Catalyst _____
- Flue _____
- Room _____
- Dilution Tunnel _____

Pitot Leak Check

- Side A _____
- Side B _____

Pitot Tube

- ID Number _____
- Type _____

Sampling Train Leak Check

- Train A _____
- Train B _____

Sampling Train ID Numbers	Train 1	Train 2
Dry Gas Meter	_____	_____
Rotameter	_____	_____
Probe	_____	_____
Filter Front	_____	_____
Filter Back	_____	_____
Filter Thermocouple	_____	_____
Train Exit Thermometer	_____	_____

Figure 12.15. Sheet 5G-3.11 - Pre Test Run Data Sheet (Method 5G-3)

Wood Heater _____ Operator _____ Date _____ Run No. _____

Time		Wood Weight	Meter Reading	Rotameter Reading (orifice)	Temperatures				Vacuum Gauge	Velocity		Room Temp	Comments
Clock	Test				Filter	Exit	Inlet Meter	Outlet Meter		ΔP	Tunnel Temp.		

Figure 12.16. Sheet 5G-4.1 - Sampling Data Sheet 5G

Yes	No	Comment	Operation
			PRE-SAMPLING PREPARATION
___	___	_____	1. Knowledge of process conditions
___	___	_____	2. Calibration of pertinent equipment: in particular, the dry gas meter, manometer, pitot tube cleaned, and static pressure measured
			ON-SITE MEASUREMENTS
___	___	_____	3. Sample train assembly
___	___	_____	4. Pretest leak check of train
___	___	_____	5. Velocity traverse procedure
___	___	_____	6. Post-test leak check
___	___	_____	7. Sample recovery and integrity
___	___	_____	8. Recording of pertinent process information during sample collection
			POST-SAMPLING
___	___	_____	9. Check of analytical balance
___	___	_____	10. Use of acceptable detection blanks in correcting field sample results
___	___	_____	11. Calculation procedure/check
___	___	_____	12. Dry gas meter calibration check

GENERAL COMMENTS

Figure 12.17. Sheet 5G-8.1 - Method 5 Checklist to Be Used by Auditors